LPC408x/7x

32-bit ARM Cortex-M4 MCU; up to 512 kB flash, 96 kB SRAM; USB Device/Host/OTG; Ethernet; LCD; EMC; SPIFI

Rev. 3 — 11 January 2017 Product data sheet

1. General description

The LPC408x/7x is an ARM Cortex-M4 based digital signal controller for embedded applications requiring a high level of integration and low power dissipation.

The ARM Cortex-M4 is a next generation core that offers system enhancements such as low power consumption, enhanced debug features, and a high level of support block integration. The ARM Cortex-M4 CPU incorporates a 3-stage pipeline, uses a Harvard architecture with separate local instruction and data buses as well as a third bus for peripherals, and includes an internal prefetch unit that supports speculative branching. The ARM Cortex-M4 supports single-cycle digital signal processing and SIMD instructions. A hardware floating-point processor is integrated in the core for several versions of the part.

The LPC408x/7x adds a specialized flash memory accelerator to accomplish optimal performance when executing code from flash. The LPC408x/7x is targeted to operate at up to 120 MHz CPU frequency.

The peripheral complement of the LPC408x/7x includes up to 512 kB of flash program memory, up to 96 kB of SRAM data memory, up to 4032 byte of EEPROM data memory, External Memory controller (EMC), LCD, Ethernet, USB Device/Host/OTG, an SPI Flash Interface (SPIFI), a General Purpose DMA controller, five UARTs, three SSP controllers, three I^2C-bus interfaces, a Quadrature Encoder Interface, four general purpose timers, two general purpose PWMs with six outputs each and one motor control PWM, an ultra-low power RTC with separate battery supply and event recorder, a windowed watchdog timer, a CRC calculation engine and up to 165 general purpose I/O pins.

The analog peripherals include one eight-channel 12-bit ADC, two analog comparators, and a DAC.

The pinout of LPC408x/7x is intended to allow pin function compatibility with the LPC24xx/23xx as well as the LPC178x/7x families.

For additional documentation, see Section 17 “References”.

2. Features and benefits

- Functional replacement for LPC23xx/24xx and LPC178x/7x family devices.
- ARM Cortex-M4 core:
  - ARM Cortex-M4 processor, running at frequencies of up to 120 MHz.
  - ARM Cortex-M4 built-in Memory Protection Unit (MPU) supporting eight regions.
  - ARM Cortex-M4 built-in Nested Vectored Interrupt Controller (NVIC).

- Hardware floating-point unit (not all versions).
- Non-maskable Interrupt (NMI) input.
- JTAG and Serial Wire Debug (SWD), serial trace, eight breakpoints, and four watch points.
- System tick timer.

- System:
  - Multilayer AHB matrix interconnect provides a separate bus for each AHB master. AHB masters include the CPU, and General Purpose DMA controller. This interconnect provides communication with no arbitration delays unless two masters attempt to access the same slave at the same time.
  - Split APB bus allows for higher throughput with fewer stalls between the CPU and DMA. A single level of write buffering allows the CPU to continue without waiting for completion of APB writes if the APB was not already busy.
  - Embedded Trace Macrocell (ETM) module supports real-time trace.
  - Boundary scan for simplified board testing.
- Memory:
  - 512 kB on-chip flash program memory with In-System Programming (ISP) and In-Application Programming (IAP) capabilities. The combination of an enhanced flash memory accelerator and location of the flash memory on the CPU local code/data bus provides high code performance from flash.
  - Up to 96 kB on-chip SRAM includes:

    64 kB of main SRAM on the CPU with local code/data bus for high-performance CPU access.

    Two 16 kB peripheral SRAM blocks with separate access paths for higher throughput. These SRAM blocks may be used for DMA memory as well as for general purpose instruction and data storage.
  - Up to 4032 byte on-chip EEPROM.
- LCD controller, supporting both Super-Twisted Nematic (STN) and Thin-Film Transistors (TFT) displays.
  - Dedicated DMA controller.
  - Selectable display resolution (up to 1024 × 768 pixels).
  - Supports up to 24-bit true-color mode.
- External Memory Controller (EMC) provides support for asynchronous static memory devices such as RAM, ROM and flash, as well as dynamic memories such as single data rate SDRAM.
- Eight channel General Purpose DMA controller (GPDMA) on the AHB multilayer matrix that can be used with the SSP, I2S, UART, CRC engine, Analog-to-Digital and Digital-to-Analog converter peripherals, timer match signals, GPIO, and for memory-to-memory transfers.
- Serial interfaces:
  - Quad SPI Flash Interface (SPIFI) with four lanes and up to 40 MB per second.
  - Ethernet MAC with MII/RMII interface and associated DMA controller. These functions reside on an independent AHB.
  - USB 2.0 full-speed dual port device/host/OTG controller with on-chip PHY and associated DMA controller.

All information provided in this document is subject to legal disclaimers.

© NXP Semiconductors N.V. 2017. All rights reserved.

- Five UARTs with fractional baud rate generation, internal FIFO, DMA support, and RS-485/EIA-485 support. One UART (UART1) has full modem control I/O, and one UART (USART4) supports IrDA, synchronous mode, and a smart card mode conforming to ISO7816-3.
- Three SSP controllers with FIFO and multi-protocol capabilities. The SSP interfaces can be used with the GPDMA controller.
- Three enhanced I^2C-bus interfaces, one with a true open-drain output supporting the full I^2C-bus specification and Fast-mode Plus with data rates of 1 Mbit/s, two with standard port pins. Enhancements include multiple address recognition and monitor mode.
- I^2S (Inter-IC Sound) interface for digital audio input or output. It can be used with the GPDMA.
- CAN controller with two channels.

- Digital peripherals:
  - SD/MMC memory card interface.
  - Up to 165 General Purpose I/O (GPIO) pins depending on the packaging, with configurable pull-up/down resistors, open-drain mode, and repeater mode. All GPIOs are located on an AHB bus for fast access and support Cortex-M4 bit-banding. GPIOs can be accessed by the General Purpose DMA Controller. Any pin of ports 0 and 2 can be used to generate an interrupt.
  - Two external interrupt inputs configurable as edge/level sensitive. All pins on port 0 and port 2 can be used as edge sensitive interrupt sources.
  - Four general purpose timers/counters, with a total of eight capture inputs and ten compare outputs. Each timer block has an external count input. Specific timer events can be selected to generate DMA requests.
  - Quadrature encoder interface that can monitor one external quadrature encoder.
  - Two standard PWM/timer blocks with external count input option.
  - One motor control PWM with support for three-phase motor control.
  - Real-Time Clock (RTC) with a separate power domain. The RTC is clocked by a dedicated RTC oscillator. The RTC block includes 20 bytes of battery-powered backup registers, allowing system status to be stored when the rest of the chip is powered off. Battery power can be supplied from a standard 3 V lithium button cell. The RTC will continue working when the battery voltage drops to as low as 2.1 V. An RTC interrupt can wake up the CPU from any reduced power mode.
  - Event Recorder that can capture the clock value when an event occurs on any of three inputs. The event identification and the time it occurred are stored in registers. The Event Recorder is located in the RTC power domain and can therefore operate as long as there is RTC power.
  - Windowed Watchdog Timer (WWDT). Windowed operation, dedicated internal oscillator, watchdog warning interrupt, and safety features.
  - CRC Engine block can calculate a CRC on supplied data using one of three standard polynomials. The CRC engine can be used in conjunction with the DMA controller to generate a CRC without CPU involvement in the data transfer.
- Analog peripherals:
  - 12-bit Analog-to-Digital Converter (ADC) with input multiplexing among eight pins, conversion rates up to 400 kHz, and multiple result registers. The 12-bit ADC can be used with the GPDMA controller.

All information provided in this document is subject to legal disclaimers.

© NXP Semiconductors N.V. 2017. All rights reserved.

- 10-bit Digital-to-Analog Converter (DAC) with dedicated conversion timer and DMA support.
- Two analog comparators.

- Power control:
  - Four reduced power modes: Sleep, Deep-sleep, Power-down, and Deep power-down.
  - The Wake-up Interrupt Controller (WIC) allows the CPU to automatically wake up from any priority interrupt that can occur while the clocks are stopped in Deep-sleep, Power-down, and Deep power-down modes.
  - Processor wake-up from Power-down mode via any interrupt able to operate during Power-down mode (includes external interrupts, RTC interrupt, PORT0/2 pin interrupt, and NMI).
  - Brownout detect with separate threshold for interrupt and forced reset.
  - On-chip Power-On Reset (POR).
- Clock generation:
  - Clock output function that can reflect the main oscillator clock, IRC clock, RTC clock, CPU clock, USB clock, or the watchdog timer clock.
  - On-chip crystal oscillator with an operating range of 1 MHz to 25 MHz.
  - 12 MHz Internal RC oscillator (IRC) trimmed to 1 % accuracy that can optionally be used as a system clock.
  - An on-chip PLL allows CPU operation up to the maximum CPU rate without the need for a high-frequency crystal. May be run from the main oscillator or the internal RC oscillator.
  - A second, dedicated PLL may be used for USB interface in order to allow added flexibility for the Main PLL settings.
- Versatile pin function selection feature allows many possibilities for using on-chip peripheral functions.
- Unique device serial number for identification purposes.
- Single 3.3 V power supply (2.4 V to 3.6 V). Temperature range of –40 °C to 85 °C.
- Available as LQFP208, TFBGA208, TFBGA180, LQFP144, TFBGA80, and LQFP80 package.

3. Applications

- Communications:
  - Point-of-sale terminals, web servers, multi-protocol bridges
- Industrial/Medical:
  - Automation controllers, application control, robotics control, HVAC, PLC, inverters, circuit breakers, medical scanning, security monitoring, motor drive, video intercom
- Consumer/Appliance:
  - Audio, MP3 decoders, alarm systems, displays, printers, scanners, small appliances, fitness equipment
- Automotive:
  - After-market, car alarms, GPS/fleet monitors

All information provided in this document is subject to legal disclaimers.

© NXP Semiconductors N.V. 2017. All rights reserved.

4. Ordering information

Table 1. Ordering information

Type number	Package		
	Name	Description	Version
LPC4088			
LPC4088FBD208	LQFP208	plastic low profile quad flat package; 208 leads; body 28 × 28 × 1.4 mm	SOT459-1
LPC4088FET208	TFBGA208	plastic thin fine-pitch ball grid array package; 208 balls; body 15 × 15 × 0.7 mm	SOT950-1
LPC4088FET180	TFBGA180	thin fine-pitch ball grid array package; 180 balls	SOT570-3
LPC4088FBD144	LQFP144	plastic low profile quad flat package; 144 leads; body 20 × 20 × 1.4 mm	SOT486-1
LPC4078			
LPC4078FBD208	LQFP208	plastic low profile quad flat package; 208 leads; body 28 × 28 × 1.4 mm	SOT459-1
LPC4078FET208	TFBGA208	plastic thin fine-pitch ball grid array package; 208 balls; body 15 × 15 × 0.7 mm	SOT950-1
LPC4078FET180	TFBGA180	thin fine-pitch ball grid array package; 180 balls	SOT570-3
LPC4078FBD144	LQFP144	plastic low profile quad flat package; 144 leads; body 20 × 20 × 1.4 mm	SOT486-1
LPC4078FBD80	LQFP80	plastic low-profile quad package; 80 leads; body 12 × 12 × 1.4 mm	SOT315-1
LPC4078FBD100	LQFP100	plastic low profile quad flat package; 100 leads; body 14 × 14 × 1.4 mm	SOT407-1
LPC4076			
LPC4076FET180	TFBGA180	thin fine-pitch ball grid array package; 180 balls	SOT570-3
LPC4076FBD144	LQFP144	plastic low profile quad flat package; 144 leads; body 20 × 20 × 1.4 mm	SOT486-1
LPC4074			
LPC4074FBD144	LQFP144	plastic low profile quad flat package; 144 leads; body 20 × 20 × 1.4 mm	SOT486-1
LPC4074FBD80	LQFP80	plastic low-profile quad package; 80 leads; body 12 × 12 × 1.4 mm	SOT315-1
LPC4072			
LPC4072FET80	TFBGA80	plastic thin fine-pitch ball grid array package; 80 balls	SOT1328-1
LPC4072FBD80	LQFP80	plastic low-profile quad package; 80 leads; body 12 × 12 × 1.4 mm	SOT315-1

Table 2. Ordering options

Type number	Flash (kB)	SRAM (kB)	EEPROM (B)	EMC bus width (bit)	LCD	Ethernet	USB	CAN	UART	QEI	SD/MMC	Comparator	FPU	Package
LPC4088														
LPC4088FBD208	512	96	4032	32	yes	yes	H/O/D	2	5	yes	yes	yes	yes	LQFP208
LPC4088FET208	512	96	4032	32	yes	yes	H/O/D	2	5	yes	yes	yes	yes	TFBGA208
LPC4088FET180	512	96	4032	16	yes	yes	H/O/D	2	5	yes	yes	yes	yes	TFBGA180
LPC4088FBD144	512	96	4032	8	yes	yes	H/O/D	2	5	yes	yes	yes	yes	LQFP144
LPC4078														
LPC4078FBD208	512	96	4032	32	no	yes	H/O/D	2	5	yes	yes	yes	yes	LQFP208
LPC4078FET208	512	96	4032	32	no	yes	H/O/D	2	5	yes	yes	yes	yes	TFBGA208
LPC4078FET180	512	96	4032	16	no	yes	H/O/D	2	5	yes	yes	yes	yes	TFBGA180

All information provided in this document is subject to legal disclaimers.

© NXP Semiconductors N.V. 2017. All rights reserved.

Table 2. Ordering options *...continued*

Type number	Flash (kB)	SRAM (kB)	EEPROM (B)	EMC bus width (bit)	LCD	Ethernet	USB	CAN	UART	QEI	SD/MMC	Comparator	FPU	Package
LPC4078FBD144	512	96	4032	8	no	yes	H/O/D	2	5	yes	yes	yes	yes	LQFP144
LPC4078FBD100	512	96	4032	-	no	yes	H/O/D	2	5	yes	yes	yes	yes	LQFP100
LPC4078FBD80	512	96	4032	-	no	yes	H/O/D	2	5	yes	no	yes	yes	LQFP80
LPC4076														
LPC4076FET180	256	80	2048	16	no	yes	H/O/D	2	5	yes	yes	yes	yes	TFBGA180
LPC4076FBD144	256	80	2048	8	no	yes	H/O/D	2	5	yes	yes	yes	yes	LQFP144
LPC4074														
LPC4074FBD144	128	40	2048	-	no	no	D	2	4	no	no	no	no	LQFP144
LPC4074FBD80	128	40	2048	-	no	no	D	2	4	no	no	no	no	LQFP80
LPC4072														
LPC4072FET80	64	24	2048	-	no	no	D	2	4	no	no	no	no	TFBGA80
LPC4072FBD80	64	24	2048	-	no	no	D	2	4	no	no	no	no	LQFP80

All information provided in this document is subject to legal disclaimers.

© NXP Semiconductors N.V. 2017. All rights reserved.

5. Block diagram

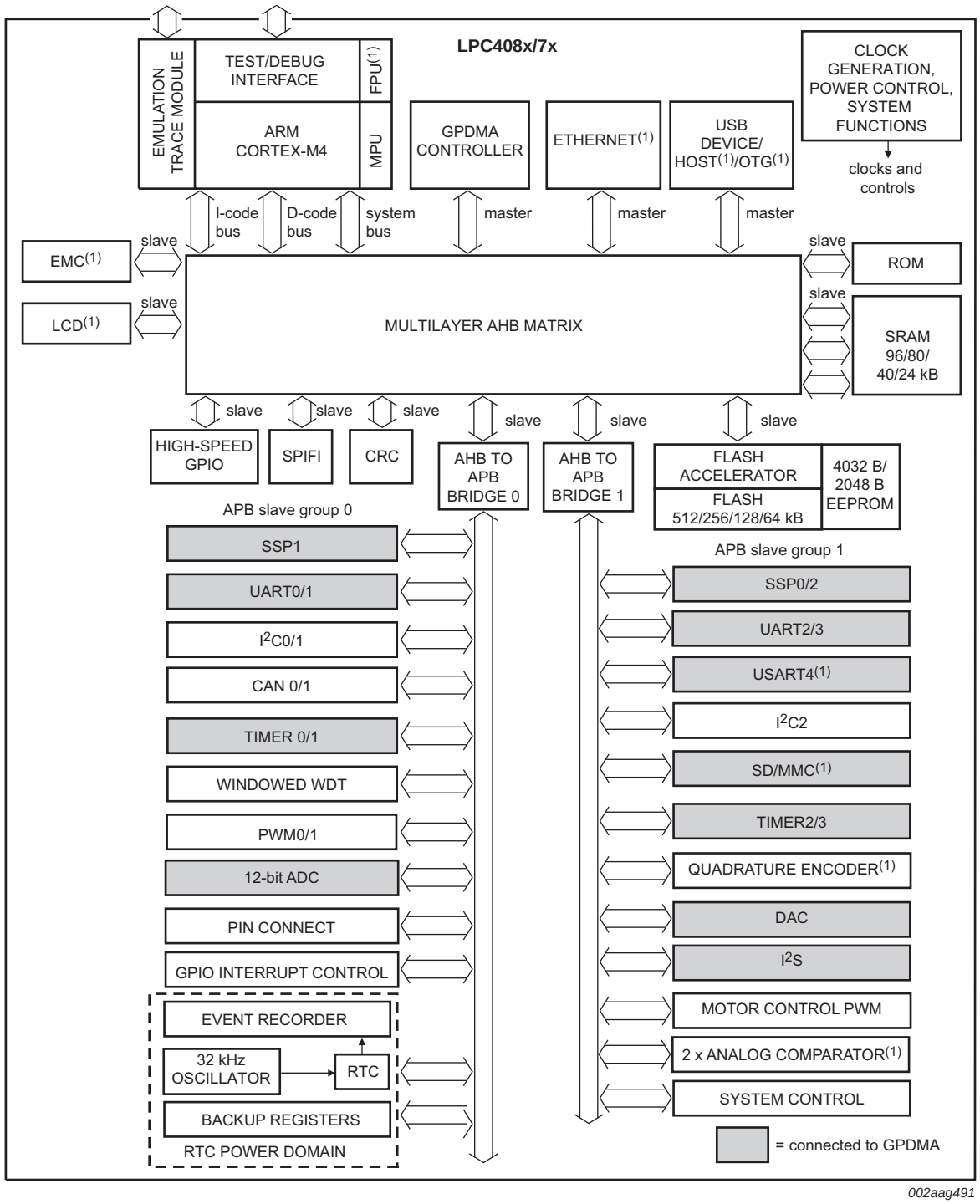

(1) Not available on all parts.

Fig 1. Block diagram

All information provided in this document is subject to legal disclaimers.

© NXP Semiconductors N.V. 2017. All rights reserved.

6. Pinning information

6.1 Pinning

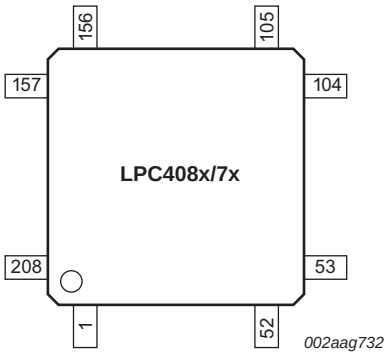

Fig 2. Pin configuration (LQFP208)

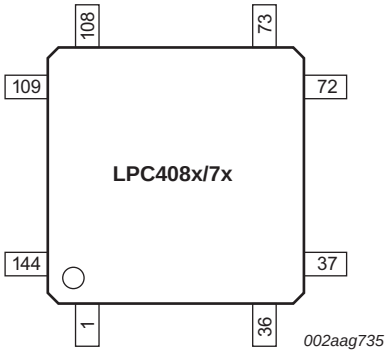

Fig 3. Pin configuration (LQFP144)

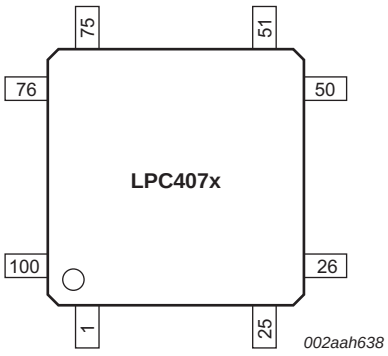

Fig 4. Pin configuration (LQFP100)

All information provided in this document is subject to legal disclaimers.

© NXP Semiconductors N.V. 2017. All rights reserved.

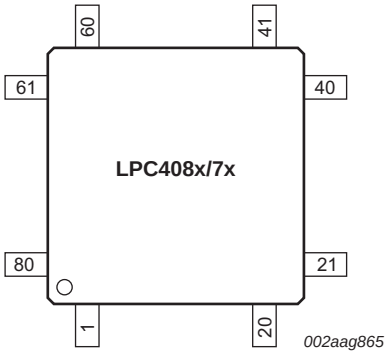

Fig 5. Pin configuration (LQFP80)

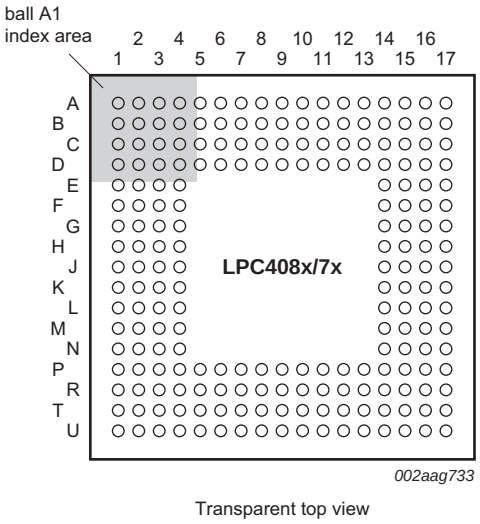

Fig 6. Pin configuration (TFBGA208)

All information provided in this document is subject to legal disclaimers.

© NXP Semiconductors N.V. 2017. All rights reserved.

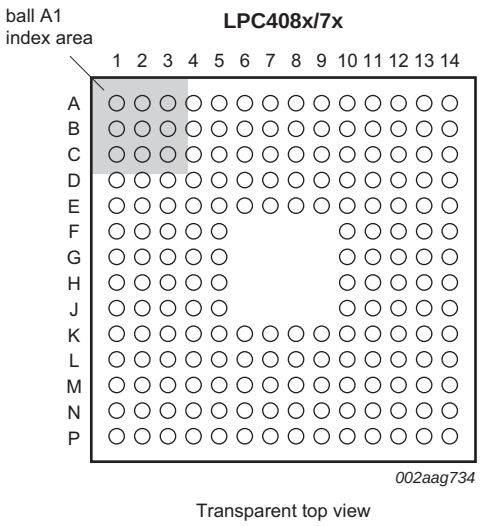

Fig 7. Pin configuration (TFBGA180)

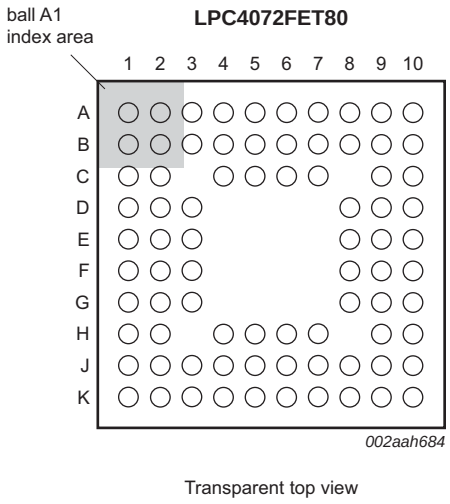

Fig 8. Pin configuration (TFBGA80)

6.2 Pin description

I/O pins on the LPC408x/7x are 5 V tolerant and have input hysteresis unless otherwise indicated in the table below. Crystal pins, power pins, and reference voltage pins are not 5 V tolerant. In addition, when pins are selected to be ADC inputs, they are no longer 5 V tolerant and the input voltage must be limited to the voltage at the ADC positive reference pin (VREFP).

All port pins Pn[m] are multiplexed, and the multiplexed functions appear in Table 3 in the order defined by the FUNC bits of the corresponding IOCON register up to the highest used function number. Each port pin can support up to eight multiplexed functions. IOCON register FUNC values which are reserved are noted as “R” in the pin configuration table.

All information provided in this document is subject to legal disclaimers.

© NXP Semiconductors N.V. 2017. All rights reserved.

Table 3. Pin description

Not all functions are available on all parts. See Table 2 (Ethernet, USB, LCD, QEI, SD/MMC, comparator pins) and Table 5 (EMC pins).

Symbol	Pin LQFP208	Ball TFBGA208	Ball TFBGA180	Pin LQFP144	Pin LQFP100	Pin LQFP80	Pin TFBGA80		Reset state[1]	Type[2]	Description
P0[0] to P0[31]										I/O	**Port 0:** Port 0 is a 32-bit I/O port with individual direction controls for each bit. The operation of port 0 pins depends upon the pin function selected via the pin connect block.
P0[0]	94	U15	M10	66	46	37	J9	[3]	I; PU	I/O	**P0[0] —** General purpose digital input/output pin.
										I	**CAN_RD1 —** CAN1 receiver input.
										O	**U3_TXD —** Transmitter output for UART3.
										I/O	**I2C1_SDA —** I^2C1 data input/output (this pin does not use a specialized I2C pad).
										O	**U0_TXD —** Transmitter output for UART0.
P0[1]	96	T14	N11	67	47	38	J10	[3]	I; PU	I/O	**P0[1] —** General purpose digital input/output pin.
										O	**CAN_TD1 —** CAN1 transmitter output.
										I	**U3_RXD —** Receiver input for UART3.
										I/O	**I2C1_SCL —** I^2C1 clock input/output (this pin does not use a specialized I2C pad).
										I	**U0_RXD —** Receiver input for UART0.
P0[2]	202	C4	D5	141	98	79	A2	[3]	I; PU	I/O	**P0[2] —** General purpose digital input/output pin.
										O	**U0_TXD —** Transmitter output for UART0.
										O	**U3_TXD —** Transmitter output for UART3.
P0[3]	204	D6	A3	142	99	80	A1	[3]	I; PU	I/O	**P0[3] —** General purpose digital input/output pin.
										I	**U0_RXD —** Receiver input for UART0.
										I	**U3_RXD —** Receiver input for UART3.

All information provided in this document is subject to legal disclaimers.

© NXP Semiconductors N.V. 2017. All rights reserved.

Table 3. Pin description *...continued*

Not all functions are available on all parts. See Table 2 (Ethernet, USB, LCD, QEI, SD/MMC, comparator pins) and Table 5 (EMC pins).

Symbol	Pin LQFP208	Ball TFBGA208	Ball TFBGA180	Pin LQFP144	Pin LQFP100	Pin LQFP80	Pin TFBGA80		Reset state[1]	Type[2]	Description
P0[4]	168	B12	A11	116	81	-	-	[3]	I; PU	I/O	**P0[4] —** General purpose digital input/output pin.
										I/O	**I2S_RX_SCK —** I^2S Receive clock. It is driven by the master and received by the slave. Corresponds to the signal SCK in the *I^2S-bus specification*.
										I	**CAN_RD2 —** CAN2 receiver input.
										I	**T2_CAP0 —** Capture input for Timer 2, channel 0.
										-	**R —** Function reserved.
										I/O	**CMP_ROSC —** Comparator relaxation oscillator for 555 timer applications.
										-	**R —** Function reserved.
										O	**LCD_VD[0] —** LCD data.
P0[5]	166	C12	B11	115	80	-	-	[3]	I; PU	I/O	**P0[5] —** General purpose digital input/output pin.
										I/O	**I2S_RX_WS —** I^2S Receive word select. It is driven by the master and received by the slave. Corresponds to the signal WS in the *I^2S-bus specification*.
										O	**CAN_TD2 —** CAN2 transmitter output.
										I	**T2_CAP1 —** Capture input for Timer 2, channel 1.
										-	**R —** Function reserved.
										I	**CMP_RESET —** Comparator reset.
										-	**R —** Function reserved.
										O	**LCD_VD[1] —** LCD data.

All information provided in this document is subject to legal disclaimers.

© NXP Semiconductors N.V. 2017. All rights reserved.

Table 3. Pin description *...continued*

Not all functions are available on all parts. See Table 2 (Ethernet, USB, LCD, QEI, SD/MMC, comparator pins) and Table 5 (EMC pins).

Symbol	Pin LQFP208	Ball TFBGA208	Ball TFBGA180	Pin LQFP144	Pin LQFP100	Pin LQFP80	Pin TFBGA80		Reset state[1]	Type[2]	Description
P0[6]	164	D13	D11	113	79	64	A7	[3]	I; PU	I/O	**P0[6] —** General purpose digital input/output pin.
										I/O	**I2S_RX_SDA —** I^2S Receive data. It is driven by the transmitter and read by the receiver. Corresponds to the signal SD in the *I^2S-bus specification*.
										I/O	**SSP1_SSEL —** Slave Select for SSP1.
										O	**T2_MAT0 —** Match output for Timer 2, channel 0.
										O	**U1_RTS —** Request to Send output for UART1. Can also be configured to be an RS-485/EIA-485 output enable signal for UART1.
										I/O	**CMP_ROSC —** Comparator relaxation oscillator for 555 timer applications.
										-	**R —** Function reserved.
										O	**LCD_VD[8] —** LCD data.
P0[7]	162	C13	B12	112	78	63	A8	[4]	I; IA	I/O	**P0[7] —** General purpose digital input/output pin.
										I/O	**I2S_TX_SCK —** I^2S transmit clock. It is driven by the master and received by the slave. Corresponds to the signal SCK in the *I^2S-bus specification*.
										I/O	**SSP1_SCK —** Serial Clock for SSP1.
										O	**T2_MAT1 —** Match output for Timer 2, channel 1.
										I	**RTC_EV0 —** Event input 0 to Event Monitor/Recorder.
										I	**CMP_VREF —** Comparator reference voltage.
										-	**R —** Function reserved.
										O	**LCD_VD[9] —** LCD data.

All information provided in this document is subject to legal disclaimers.

© NXP Semiconductors N.V. 2017. All rights reserved.

Table 3. Pin description *...continued*

Not all functions are available on all parts. See Table 2 (Ethernet, USB, LCD, QEI, SD/MMC, comparator pins) and Table 5 (EMC pins).

Symbol	Pin LQFP208	Ball TFBGA208	Ball TFBGA180	Pin LQFP144	Pin LQFP100	Pin LQFP80	Pin TFBGA80		Reset state[1]	Type[2]	Description
P0[8]	160	A15	C12	111	77	62	A10	[4]	I; IA	I/O	**P0[8] —** General purpose digital input/output pin.
										I/O	**I2S_TX_WS —** I^2S Transmit word select. It is driven by the master and received by the slave. Corresponds to the signal WS in the *I^2S-bus specification*.
										I/O	**SSP1_MISO —** Master In Slave Out for SSP1.
										O	**T2_MAT2 —** Match output for Timer 2, channel 2.
										I	**RTC_EV1 —** Event input 1 to Event Monitor/Recorder.
										I	**CMP1_IN[3] —** Comparator 1, input 3.
										-	**R —** Function reserved.
										O	**LCD_VD[16] —** LCD data.
P0[9]	158	C14	A13	109	76	61	A9	[4]	I; IA	I/O	**P0[9] —** General purpose digital input/output pin.
										I/O	**I2S_TX_SDA —** I^2S transmit data. It is driven by the transmitter and read by the receiver. Corresponds to the signal SD in the *I^2S-bus specification*.
										I/O	**SSP1_MOSI —** Master Out Slave In for SSP1.
										O	**T2_MAT3 —** Match output for Timer 2, channel 3.
										I	**RTC_EV2 —** Event input 2 to Event Monitor/Recorder.
										I	**CMP1_IN[2] —** Comparator 1, input 2.
										-	**R —** Function reserved.
										O	**LCD_VD[17] —** LCD data.

All information provided in this document is subject to legal disclaimers.

© NXP Semiconductors N.V. 2017. All rights reserved.

Table 3. Pin description *...continued*

Not all functions are available on all parts. See Table 2 (Ethernet, USB, LCD, QEI, SD/MMC, comparator pins) and Table 5 (EMC pins).

Symbol	Pin LQFP208	Ball TFBGA208	Ball TFBGA180	Pin LQFP144	Pin LQFP100	Pin LQFP80	Pin TFBGA80		Reset state[1]	Type[2]	Description
P0[10]	98	T15	L10	69	48	39	K9	[3]	I; PU	I/O	**P0[10] —** General purpose digital input/output pin.
										O	**U2_TXD —** Transmitter output for UART2.
										I/O	**I2C2_SDA —** I^2C2 data input/output (this pin does not use a specialized I2C pad).
										O	**T3_MAT0 —** Match output for Timer 3, channel 0.
										-	**R —** Function reserved.
										-	**R —** Function reserved.
										-	**R —** Function reserved.
										O	**LCD_VD[5] —** LCD data.
P0[11]	100	R14	P12	70	49	40	K10	[3]	I; PU	I/O	**P0[11] —** General purpose digital input/output pin.
										I	**U2_RXD —** Receiver input for UART2.
										I/O	**I2C2_SCL —** I^2C2 clock input/output (this pin does not use a specialized I2C pad).
										O	**T3_MAT1 —** Match output for Timer 3, channel 1.
										-	**R —** Function reserved.
										-	**R —** Function reserved.
										-	**R —** Function reserved.
										O	**LCD_VD[10] —** LCD data.
P0[12]	41	R1	J4	29	-	-	-	[5]	I; PU	I/O	**P0[12] —** General purpose digital input/output pin.
										O	**$\overline{\text{USB_PPWR2}}$ —** Port Power enable signal for USB port 2.
										I/O	**SSP1_MISO —** Master In Slave Out for SSP1.
										I	**ADC0_IN[6] —** A/D converter 0, input 6. When configured as an ADC input, the digital function of the pin must be disabled.

All information provided in this document is subject to legal disclaimers.

© NXP Semiconductors N.V. 2017. All rights reserved.

Table 3. Pin description *...continued*

Not all functions are available on all parts. See Table 2 (Ethernet, USB, LCD, QEI, SD/MMC, comparator pins) and Table 5 (EMC pins).

Symbol	Pin LQFP208	Ball TFBGA208	Ball TFBGA180	Pin LQFP144	Pin LQFP100	Pin LQFP80	Pin TFBGA80		Reset state[1]	Type[2]	Description
P0[13]	45	R2	J5	32	-	-	-	[5]	I; PU	I/O	**P0[13] —** General purpose digital input/output pin.
										O	**USB_UP_LED2 —** USB port 2 GoodLink LED indicator. It is LOW when the device is configured (non-control endpoints enabled), or when the host is enabled and has detected a device on the bus. It is HIGH when the device is not configured, or when host is enabled and has not detected a device on the bus, or during global suspend. It transitions between LOW and HIGH (flashes) when the host is enabled and detects activity on the bus.
										I/O	**SSP1_MOSI —** Master Out Slave In for SSP1.
										I	**ADC0_IN[7] —** A/D converter 0, input 7. When configured as an ADC input, the digital function of the pin must be disabled.
P0[14]	69	T7	M5	48	-	-	-	[3]	I; PU	I/O	**P0[14] —** General purpose digital input/output pin.
										O	**USB_HSTEN2 —** Host Enabled status for USB port 2.
										I/O	**SSP1_SSEL —** Slave Select for SSP1.
										O	**USB_CONNECT2 —** SoftConnect control for USB port 2. Signal used to switch an external 1.5 kΩ resistor under software control. Used with the SoftConnect USB feature.
P0[15]	128	J16	H13	89	62	47	F9	[3]	I; PU	I/O	**P0[15] —** General purpose digital input/output pin.
										O	**U1_TXD —** Transmitter output for UART1.
										I/O	**SSP0_SCK —** Serial clock for SSP0.
										-	**R —** Function reserved.
										-	**R —** Function reserved.
										I/O	**SPIFI_IO[2] —** Data bit 0 for SPIFI.

All information provided in this document is subject to legal disclaimers.

© NXP Semiconductors N.V. 2017. All rights reserved.

Table 3. Pin description *...continued*

Not all functions are available on all parts. See Table 2 (Ethernet, USB, LCD, QEI, SD/MMC, comparator pins) and Table 5 (EMC pins).

Symbol	Pin LQFP208	Ball TFBGA208	Ball TFBGA180	Pin LQFP144	Pin LQFP100	Pin LQFP80	Pin TFBGA80		Reset state[1]	Type[2]	Description
P0[16]	130	J14	H14	90	63	48	F8	[3]	I; PU	I/O	**P0[16] —** General purpose digital input/output pin.
										I	**U1_RXD —** Receiver input for UART1.
										I/O	**SSP0_SSEL —** Slave Select for SSP0.
										-	**R —** Function reserved.
										-	**R —** Function reserved.
										I/O	**SPIFI_IO[3] —** Data bit 0 for SPIFI.
P0[17]	126	K17	J12	87	61	46	F10	[3]	I; PU	I/O	**P0[17] —** General purpose digital input/output pin.
										I	**U1_CTS —** Clear to Send input for UART1.
										I/O	**SSP0_MISO —** Master In Slave Out for SSP0.
										-	**R —** Function reserved.
										-	**R —** Function reserved.
										I/O	**SPIFI_IO[1] —** Data bit 0 for SPIFI.
P0[18]	124	K15	J13	86	60	45	G10	[3]	I; PU	I/O	**P0[18] —** General purpose digital input/output pin.
										I	**U1_DCD —** Data Carrier Detect input for UART1.
										I/O	**SSP0_MOSI —** Master Out Slave In for SSP0.
										-	**R —** Function reserved.
										-	**R —** Function reserved.
										I/O	**SPIFI_IO[0] —** Data bit 0 for SPIFI.
P0[19]	122	L17	J10	85	59	-	-	[3]	I; PU	I/O	**P0[19] —** General purpose digital input/output pin.
										I	**U1_DSR —** Data Set Ready input for UART1.
										O	**SD_CLK —** Clock output line for SD card interface.
										I/O	**I2C1_SDA —** I^2C1 data input/output (this pin does not use a specialized I2C pad).
										-	**R —** Function reserved.
										-	**R —** Function reserved.
										-	**R —** Function reserved.
										O	**LCD_VD[13] —** LCD data.

All information provided in this document is subject to legal disclaimers.

© NXP Semiconductors N.V. 2017. All rights reserved.

Table 3. Pin description *...continued*

Not all functions are available on all parts. See Table 2 (Ethernet, USB, LCD, QEI, SD/MMC, comparator pins) and Table 5 (EMC pins).

Symbol	Pin LQFP208	Ball TFBGA208	Ball TFBGA180	Pin LQFP144	Pin LQFP100	Pin LQFP80	Pin TFBGA80		Reset state[1]	Type[2]	Description
P0[20]	120	M17	K14	83	58	-	-	[3]	I; PU	I/O	**P0[20] —** General purpose digital input/output pin.
										O	**U1_DTR —** Data Terminal Ready output for UART1. Can also be configured to be an RS-485/EIA-485 output enable signal for UART1.
										I/O	**SD_CMD —** Command line for SD card interface.
										I/O	**I2C1_SCL —** I^2C1 clock input/output (this pin does not use a specialized I2C pad).
										-	**R —** Function reserved.
										-	**R —** Function reserved.
										-	**R —** Function reserved.
										O	**LCD_VD[14] —** LCD data.
P0[21]	118	M16	K11	82	57	-	-	[3]	I; PU	I/O	**P0[21] —** General purpose digital input/output pin.
										I	**U1_RI —** Ring Indicator input for UART1.
										O	**SD_PWR —** Power Supply Enable for external SD card power supply.
										O	**U4_OE —** RS-485/EIA-485 output enable signal for UART4.
										I	**CAN_RD1 —** CAN1 receiver input.
										I/O	**U4_SCLK —** USART 4 clock input or output in synchronous mode.
P0[22]	116	N17	L14	80	56	44	H10	[6]	I; PU	I/O	**P0[22] —** General purpose digital input/output pin.
										O	**U1_RTS —** Request to Send output for UART1. Can also be configured to be an RS-485/EIA-485 output enable signal for UART1.
										I/O	**SD_DAT[0] —** Data line 0 for SD card interface.
										O	**U4_TXD —** Transmitter output for USART4 (input/output in smart card mode).
										O	**CAN_TD1 —** CAN1 transmitter output.
										O	**SPIFI_CLK —** Clock output for SPIFI.

All information provided in this document is subject to legal disclaimers.

© NXP Semiconductors N.V. 2017. All rights reserved.

Table 3. Pin description *...continued*

Not all functions are available on all parts. See Table 2 (Ethernet, USB, LCD, QEI, SD/MMC, comparator pins) and Table 5 (EMC pins).

Symbol	Pin LQFP208	Ball TFBGA208	Ball TFBGA180	Pin LQFP144	Pin LQFP100	Pin LQFP80	Pin TFBGA80		Reset state[1]	Type[2]	Description
P0[23]	18	H1	F5	13	9	-	-	[5]	I; PU	I/O	**P0[23] —** General purpose digital input/output pin.
										I	**ADC0_IN[0] —** A/D converter 0, input 0. When configured as an ADC input, the digital function of the pin must be disabled.
										I/O	**I2S_RX_SCK —** Receive Clock. It is driven by the master and received by the slave. Corresponds to the signal SCK in the *I^2S-bus specification*.
										I	**T3_CAP0 —** Capture input for Timer 3, channel 0.
P0[24]	16	G2	E1	11	8	-	-	[5]	I; PU	I/O	**P0[24] —** General purpose digital input/output pin.
										I	**ADC0_IN[1] —** A/D converter 0, input 1. When configured as an ADC input, the digital function of the pin must be disabled.
										I/O	**I2S_RX_WS —** Receive Word Select. It is driven by the master and received by the slave. Corresponds to the signal WS in the *I^2S-bus specification*.
										I	**T3_CAP1 —** Capture input for Timer 3, channel 1.
P0[25]	14	F1	E4	10	7	7	D1	[5]	I; PU	I/O	**P0[25] —** General purpose digital input/output pin.
										I	**ADC0_IN[2] —** A/D converter 0, input 2. When configured as an ADC input, the digital function of the pin must be disabled.
										I/O	**I2S_RX_SDA —** Receive data. It is driven by the transmitter and read by the receiver. Corresponds to the signal SD in the *I^2S-bus specification*.
										O	**U3_TXD —** Transmitter output for UART3.

All information provided in this document is subject to legal disclaimers.

© NXP Semiconductors N.V. 2017. All rights reserved.

Table 3. Pin description *...continued*

Not all functions are available on all parts. See Table 2 (Ethernet, USB, LCD, QEI, SD/MMC, comparator pins) and Table 5 (EMC pins).

Symbol	Pin LQFP208	Ball TFBGA208	Ball TFBGA180	Pin LQFP144	Pin LQFP100	Pin LQFP80	Pin TFBGA80		Reset state[1]	Type[2]	Description
P0[26]	12	E1	D1	8	6	6	D2	[7]	I; PU	I/O	**P0[26] —** General purpose digital input/output pin.
										I	**ADC0_IN[3] —** A/D converter 0, input 3. When configured as an ADC input, the digital function of the pin must be disabled.
										O	**DAC_OUT —** D/A converter output. When configured as the DAC output, the digital function of the pin must be disabled.
										I	**U3_RXD —** Receiver input for UART3.
P0[27]	50	T1	L3	35	25	-	-	[8]	I	I/O	**P0[27] —** General purpose digital input/output pin.
										I/O	**I2C0_SDA —** I^2C0 data input/output. (This pin uses a specialized I2C pad).
										I/O	**USB_SDA1 —** I2C serial data for communication with an external USB transceiver.
P0[28]	48	R3	M1	34	24	-	-	[8]	I	I/O	**P0[28] —** General purpose digital input/output pin.
										I/O	**I2C0_SCL —** I^2C0 clock input/output (this pin uses a specialized I2C pad.
										I/O	**USB_SCL1 —** I2C serial clock for communication with an external USB transceiver.
P0[29]	61	U4	K5	42	29	22	J3	[9]	I	I/O	**P0[29] —** General purpose digital input/output pin.
										I/O	**USB_D+1 —** USB port 1 bidirectional D+ line.
										I	**$\overline{\text{EINT0}}$ —** External interrupt 0 input.
P0[30]	62	R6	N4	43	30	23	K3	[9]	I	I/O	**P0[30] —** General purpose digital input/output pin.
										I/O	**USB_D–1 —** USB port 1 bidirectional D– line.
										I	**$\overline{\text{EINT1}}$ —** External interrupt 1 input.
P0[31]	51	T2	N1	36	-	-	-	[9]	I	I/O	**P0[31] —** General purpose digital input/output pin.
										I/O	**USB_D+2 —** USB port 2 bidirectional D+ line.
P1[0] to P1[31]										I/O	**Port 1:** Port 1 is a 32 bit I/O port with individual direction controls for each bit. The operation of port 1 pins depends upon the pin function selected via the pin connect block

All information provided in this document is subject to legal disclaimers.

© NXP Semiconductors N.V. 2017. All rights reserved.

Table 3. Pin description *...continued*

Not all functions are available on all parts. See Table 2 (Ethernet, USB, LCD, QEI, SD/MMC, comparator pins) and Table 5 (EMC pins).

Symbol	Pin LQFP208	Ball TFBGA208	Ball TFBGA180	Pin LQFP144	Pin LQFP100	Pin LQFP80	Pin TFBGA80		Reset state[1]	Type[2]	Description
P1[0]	196	A3	B5	136	95	76	A3	[3]	I; PU	I/O	**P1[0] —** General purpose digital input/output pin.
										O	**ENET_TXD0 —** Ethernet transmit data 0 (RMII/MII interface).
										-	**R —** Function reserved.
										I	**T3_CAP1 —** Capture input for Timer 3, channel 1.
										I/O	**SSP2_SCK —** Serial clock for SSP2.
P1[1]	194	B5	A5	135	94	75	B4	[3]	I; PU	I/O	**P1[1] —** General purpose digital input/output pin.
										O	**ENET_TXD1 —** Ethernet transmit data 1 (RMII/MII interface).
										-	**R —** Function reserved.
										O	**T3_MAT3 —** Match output for Timer 3, channel 3.
										I/O	**SSP2_MOSI —** Master Out Slave In for SSP2.
P1[2]	185	D9	B7	-	-	-	-	[3]	I; PU	I/O	**P1[2] —** General purpose digital input/output pin.
										O	**ENET_TXD2 —** Ethernet transmit data 2 (MII interface).
										O	**SD_CLK —** Clock output line for SD card interface.
										O	**PWM0[1] —** Pulse Width Modulator 0, output 1.
P1[3]	177	A10	A9	-	-	-	-	[3]	I; PU	I/O	**P1[3] —** General purpose digital input/output pin.
										O	**ENET_TXD3 —** Ethernet transmit data 3 (MII interface).
										I/O	**SD_CMD —** Command line for SD card interface.
										O	**PWM0[2] —** Pulse Width Modulator 0, output 2.
P1[4]	192	A5	C6	133	93	74	B5	[3]	I; PU	I/O	**P1[4] —** General purpose digital input/output pin.
										O	**ENET_TX_EN —** Ethernet transmit data enable (RMII/MII interface).
										-	**R —** Function reserved.
										O	**T3_MAT2 —** Match output for Timer 3, channel 2.
										I/O	**SSP2_MISO —** Master In Slave Out for SSP2.

All information provided in this document is subject to legal disclaimers.

© NXP Semiconductors N.V. 2017. All rights reserved.

Table 3. Pin description *...continued*

Not all functions are available on all parts. See Table 2 (Ethernet, USB, LCD, QEI, SD/MMC, comparator pins) and Table 5 (EMC pins).

Symbol	Pin LQFP208	Ball TFBGA208	Ball TFBGA180	Pin LQFP144	Pin LQFP100	Pin LQFP80	Pin TFBGA80		Reset state[1]	Type[2]	Description
P1[5]	156	A17	B13	-	-	-	-	[3]	I; PU	I/O	**P1[5] —** General purpose digital input/output pin.
										O	**ENET_TX_ER —** Ethernet Transmit Error (MII interface).
										O	**SD_PWR —** Power Supply Enable for external SD card power supply.
										O	**PWM0[3] —** Pulse Width Modulator 0, output 3.
										-	**R —** Function reserved.
										I	**CMP1_IN[1] —** Comparator 1, input 1.
P1[6]	171	B11	B10	-	-	-	-	[3]	I; PU	I/O	**P1[6] —** General purpose digital input/output pin.
										I	**ENET_TX_CLK —** Ethernet Transmit Clock (MII interface).
										I/O	**SD_DAT[0] —** Data line 0 for SD card interface.
										O	**PWM0[4] —** Pulse Width Modulator 0, output 4.
										-	**R —** Function reserved.
										I	**CMP0_IN[3] —** Comparator 0, input 3.
P1[7]	153	D14	C13	-	-	-	-	[3]	I; PU	I/O	**P1[7] —** General purpose digital input/output pin.
										I	**ENET_COL —** Ethernet Collision detect (MII interface).
										I/O	**SD_DAT[1] —** Data line 1 for SD card interface.
										O	**PWM0[5] —** Pulse Width Modulator 0, output 5.
										-	**R —** Function reserved.
										I	**CMP1_IN[0] —** Comparator 1, input 0.
P1[8]	190	C7	B6	132	92	73	C5	[3]	I; PU	I/O	**P1[8] —** General purpose digital input/output pin.
										I	**ENET_CRS (ENET_CRS_DV) —** Ethernet Carrier Sense (MII interface) or Ethernet Carrier Sense/Data Valid (RMII interface).
										-	**R —** Function reserved.
										O	**T3_MAT1 —** Match output for Timer 3, channel 1.
										I/O	**SSP2_SSEL —** Slave Select for SSP2.

All information provided in this document is subject to legal disclaimers.

© NXP Semiconductors N.V. 2017. All rights reserved.

Table 3. Pin description *...continued*

Not all functions are available on all parts. See Table 2 (Ethernet, USB, LCD, QEI, SD/MMC, comparator pins) and Table 5 (EMC pins).

Symbol	Pin LQFP208	Ball TFBGA208	Ball TFBGA180	Pin LQFP144	Pin LQFP100	Pin LQFP80	Pin TFBGA80		Reset state[1]	Type[2]	Description
P1[9]	188	A6	D7	131	91	72	A4	[3]	I; PU	I/O	**P1[9] —** General purpose digital input/output pin.
										I	**ENET_RXD0 —** Ethernet receive data 0 (RMII/MII interface).
										-	**R —** Function reserved.
										O	**T3_MAT0 —** Match output for Timer 3, channel 0.
P1[10]	186	C8	A7	129	90	71	A5	[3]	I; PU	I/O	**P1[10] —** General purpose digital input/output pin.
										I	**ENET_RXD1 —** Ethernet receive data 1 (RMII/MII interface).
										-	**R —** Function reserved.
										I	**T3_CAP0 —** Capture input for Timer 3, channel 0.
P1[11]	163	A14	A12	-	-	-	-	[3]	I; PU	I/O	**P1[11] —** General purpose digital input/output pin.
										I	**ENET_RXD2 —** Ethernet Receive Data 2 (MII interface).
										I/O	**SD_DAT[2] —** Data line 2 for SD card interface.
										O	**PWM0[6] —** Pulse Width Modulator 0, output 6.
P1[12]	157	A16	A14	-	-	-	-	[3]	I; PU	I/O	**P1[12] —** General purpose digital input/output pin.
										I	**ENET_RXD3 —** Ethernet Receive Data (MII interface).
										I/O	**SD_DAT[3] —** Data line 3 for SD card interface.
										I	**PWM0_CAP0 —** Capture input for PWM0, channel 0.
										-	**R —** Function reserved.
										O	**CMP1_OUT —** Comparator 1, output.
P1[13]	147	D16	D14	-	-	-	-	[3]	I; PU	I/O	**P1[13] —** General purpose digital input/output pin.
										I	**ENET_RX_DV —** Ethernet Receive Data Valid (MII interface).

All information provided in this document is subject to legal disclaimers.

© NXP Semiconductors N.V. 2017. All rights reserved.

Table 3. Pin description *...continued*

Not all functions are available on all parts. See Table 2 (Ethernet, USB, LCD, QEI, SD/MMC, comparator pins) and Table 5 (EMC pins).

Symbol	Pin LQFP208	Ball TFBGA208	Ball TFBGA180	Pin LQFP144	Pin LQFP100	Pin LQFP80	Pin TFBGA80		Reset state[1]	Type[2]	Description
P1[14]	184	A7	D8	128	89	70	C6	[3]	I; PU	I/O	**P1[14] —** General purpose digital input/output pin.
										I	**ENET_RX_ER —** Ethernet receive error (RMII/MII interface).
										-	**R —** Function reserved.
										I	**T2_CAP0 —** Capture input for Timer 2, channel 0.
										-	**R —** Function reserved.
										I	**CMP0_IN[0] —** Comparator 0, input 0.
P1[15]	182	A8	A8	126	88	69	B6	[3]	I; PU	I/O	**P1[15] —** General purpose digital input/output pin.
										I	**ENET_RX_CLK (ENET_REF_CLK) —** Ethernet Receive Clock (MII interface) or Ethernet Reference Clock (RMII interface).
										-	**R —** Function reserved.
										I/O	**I2C2_SDA —** I^2C2 data input/output (this pin does not use a specialized I2C pad).
P1[16]	180	D10	B8	125	87	-	-	[3]	I; PU	I/O	**P1[16] —** General purpose digital input/output pin.
										O	**ENET_MDC —** Ethernet MIIM clock.
										O	**I2S_TX_MCLK —** I2S transmit master clock.
										-	**R —** Function reserved.
										-	**R —** Function reserved.
										I	**CMP0_IN[1] —** Comparator 0, input 1.
P1[17]	178	A9	C9	123	86	-	-	[3]	I; PU	I/O	**P1[17] —** General purpose digital input/output pin.
										I/O	**ENET_MDIO —** Ethernet MIIM data input and output.
										O	**I2S_RX_MCLK —** I2S receive master clock.
										-	**R —** Function reserved.
										-	**R —** Function reserved.
										I	**CMP0_IN[2] —** Comparator 0, input 2.

All information provided in this document is subject to legal disclaimers.

© NXP Semiconductors N.V. 2017. All rights reserved.

Table 3. Pin description *...continued*

Not all functions are available on all parts. See Table 2 (Ethernet, USB, LCD, QEI, SD/MMC, comparator pins) and Table 5 (EMC pins).

Symbol	Pin LQFP208	Ball TFBGA208	Ball TFBGA180	Pin LQFP144	Pin LQFP100	Pin LQFP80	Pin TFBGA80		Reset state[1]	Type[2]	Description
P1[18]	66	P7	L5	46	32	25	K4	[3]	I; PU	I/O	**P1[18] —** General purpose digital input/output pin.
										O	**USB_UP_LED1 —** It is LOW when the device is configured (non-control endpoints enabled), or when the host is enabled and has detected a device on the bus. It is HIGH when the device is not configured, or when host is enabled and has not detected a device on the bus, or during global suspend. It transitions between LOW and HIGH (flashes) when the host is enabled and detects activity on the bus.
										O	**PWM1[1] —** Pulse Width Modulator 1, channel 1 output.
										I	**T1_CAP0 —** Capture input for Timer 1, channel 0.
										-	**R —** Function reserved.
										I/O	**SSP1_MISO —** Master In Slave Out for SSP1.
P1[19]	68	U6	P5	47	33	26	J4	[3]	I; PU	I/O	**P1[19] —** General purpose digital input/output pin.
										O	**$\overline{\text{USB_TX_E1}}$ —** Transmit Enable signal for USB port 1 (OTG transceiver).
										O	**$\overline{\text{USB_PPWR1}}$ —** Port Power enable signal for USB port 1.
										I	**T1_CAP1 —** Capture input for Timer 1, channel 1.
										O	**MC_0A —** Motor control PWM channel 0, output A.
										I/O	**SSP1_SCK —** Serial clock for SSP1.
										O	**U2_OE —** RS-485/EIA-485 output enable signal for UART2.

All information provided in this document is subject to legal disclaimers.

© NXP Semiconductors N.V. 2017. All rights reserved.

Table 3. Pin description *...continued*

Not all functions are available on all parts. See Table 2 (Ethernet, USB, LCD, QEI, SD/MMC, comparator pins) and Table 5 (EMC pins).

Symbol	Pin LQFP208	Ball TFBGA208	Ball TFBGA180	Pin LQFP144	Pin LQFP100	Pin LQFP80	Pin TFBGA80		Reset state[1]	Type[2]	Description
P1[20]	70	U7	K6	49	34	27	J5	[3]	I; PU	I/O	**P1[20] —** General purpose digital input/output pin.
										O	**USB_TX_DP1 —** D+ transmit data for USB port 1 (OTG transceiver).
										O	**PWM1[2] —** Pulse Width Modulator 1, channel 2 output.
										I	**QEI_PHA —** Quadrature Encoder Interface PHA input.
										I	**MC_FB0 —** Motor control PWM channel 0 feedback input.
										I/O	**SSP0_SCK —** Serial clock for SSP0.
										O	**LCD_VD[6] —** LCD data.
										O	**LCD_VD[10] —** LCD data.
P1[21]	72	R8	N6	50	35	-	-	[3]	I; PU	I/O	**P1[21] —** General purpose digital input/output pin.
										O	**USB_TX_DM1 —** D− transmit data for USB port 1 (OTG transceiver).
										O	**PWM1[3] —** Pulse Width Modulator 1, channel 3 output.
										I/O	**SSP0_SSEL —** Slave Select for SSP0.
										I	**$\overline{\text{MC_ABORT}}$ —** Motor control PWM, active low fast abort.
										-	**R —** Function reserved.
										O	**LCD_VD[7] —** LCD data.
										O	**LCD_VD[11] —** LCD data.

All information provided in this document is subject to legal disclaimers.

© NXP Semiconductors N.V. 2017. All rights reserved.

Table 3. Pin description *...continued*

Not all functions are available on all parts. See Table 2 (Ethernet, USB, LCD, QEI, SD/MMC, comparator pins) and Table 5 (EMC pins).

Symbol	Pin LQFP208	Ball TFBGA208	Ball TFBGA180	Pin LQFP144	Pin LQFP100	Pin LQFP80	Pin TFBGA80		Reset state[1]	Type[2]	Description
P1[22]	74	U8	M6	51	36	28	K5	[3]	I; PU	I/O	**P1[22] —** General purpose digital input/output pin.
										I	**USB_RCV1 —** Differential receive data for USB port 1 (OTG transceiver).
										I	**USB_PWRD1 —** Power Status for USB port 1 (host power switch).
										O	**T1_MAT0 —** Match output for Timer 1, channel 0.
										O	**MC_0B —** Motor control PWM channel 0, output B.
										I/O	**SSP1_MOSI —** Master Out Slave In for SSP1.
										O	**LCD_VD[8] —** LCD data.
										O	**LCD_VD[12] —** LCD data.
P1[23]	76	P9	N7	53	37	29	H5	[3]	I; PU	I/O	**P1[23] —** General purpose digital input/output pin.
										I	**USB_RX_DP1 —** D+ receive data for USB port 1 (OTG transceiver).
										O	**PWM1[4] —** Pulse Width Modulator 1, channel 4 output.
										I	**QEI_PHB —** Quadrature Encoder Interface PHB input.
										I	**MC_FB1 —** Motor control PWM channel 1 feedback input.
										I/O	**SSP0_MISO —** Master In Slave Out for SSP0.
										O	**LCD_VD[9] —** LCD data.
										O	**LCD_VD[13] —** LCD data.

All information provided in this document is subject to legal disclaimers.

© NXP Semiconductors N.V. 2017. All rights reserved.

Table 3. Pin description *...continued*

Not all functions are available on all parts. See Table 2 (Ethernet, USB, LCD, QEI, SD/MMC, comparator pins) and Table 5 (EMC pins).

Symbol	Pin LQFP208	Ball TFBGA208	Ball TFBGA180	Pin LQFP144	Pin LQFP100	Pin LQFP80	Pin TFBGA80		Reset state[1]	Type[2]	Description
P1[24]	78	T9	P7	54	38	30	J6	[3]	I; PU	I/O	**P1[24] —** General purpose digital input/output pin.
										I	**USB_RX_DM1 —** D– receive data for USB port 1 (OTG transceiver).
										O	**PWM1[5] —** Pulse Width Modulator 1, channel 5 output.
										I	**QEI_IDX —** Quadrature Encoder Interface INDEX input.
										I	**MC_FB2 —** Motor control PWM channel 2 feedback input.
										I/O	**SSP0_MOSI —** Master Out Slave in for SSP0.
										O	**LCD_VD[10] —** LCD data.
										O	**LCD_VD[14] —** LCD data.
P1[25]	80	T10	L7	56	39	31	K6	[3]	I; PU	I/O	**P1[25] —** General purpose digital input/output pin.
										O	**$\overline{\text{USB_LS1}}$ —** Low Speed status for USB port 1 (OTG transceiver).
										O	**$\overline{\text{USB_HSTEN1}}$ —** Host Enabled status for USB port 1.
										O	**T1_MAT1 —** Match output for Timer 1, channel 1.
										O	**MC_1A —** Motor control PWM channel 1, output A.
										O	**CLKOUT —** Selectable clock output.
										O	**LCD_VD[11] —** LCD data.
										O	**LCD_VD[15] —** LCD data.
P1[26]	82	R10	P8	57	40	32	H6	[3]	I; PU	I/O	**P1[26] —** General purpose digital input/output pin.
										O	**$\overline{\text{USB_SSPND1}}$ —** USB port 1 Bus Suspend status (OTG transceiver).
										O	**PWM1[6] —** Pulse Width Modulator 1, channel 6 output.
										I	**T0_CAP0 —** Capture input for Timer 0, channel 0.
										O	**MC_1B —** Motor control PWM channel 1, output B.
										I/O	**SSP1_SSEL —** Slave Select for SSP1.
										O	**LCD_VD[12] —** LCD data.
										O	**LCD_VD[20] —** LCD data.

All information provided in this document is subject to legal disclaimers.

© NXP Semiconductors N.V. 2017. All rights reserved.

Table 3. Pin description *...continued*

Not all functions are available on all parts. See Table 2 (Ethernet, USB, LCD, QEI, SD/MMC, comparator pins) and Table 5 (EMC pins).

Symbol	Pin LQFP208	Ball TFBGA208	Ball TFBGA180	Pin LQFP144	Pin LQFP100	Pin LQFP80	Pin TFBGA80		Reset state[1]	Type[2]	Description
P1[27]	88	T12	M9	61	43	-	-	[3]	I; PU	I/O	**P1[27] —** General purpose digital input/output pin.
										I	**$\overline{\text{USB_INT1}}$ —** USB port 1 OTG transceiver interrupt (OTG transceiver).
										I	**$\overline{\text{USB_OVRCR1}}$ —** USB port 1 Over-Current status.
										I	**T0_CAP1 —** Capture input for Timer 0, channel 1.
										O	**CLKOUT —** Selectable clock output.
										-	**R —** Function reserved.
										O	**LCD_VD[13] —** LCD data.
										O	**LCD_VD[21] —** LCD data.
P1[28]	90	T13	P10	63	44	35	J8	[3]	I; PU	I/O	**P1[28] —** General purpose digital input/output pin.
										I/O	**USB_SCL1 —** USB port 1 I^2C serial clock (OTG transceiver).
										I	**PWM1_CAP0 —** Capture input for PWM1, channel 0.
										O	**T0_MAT0 —** Match output for Timer 0, channel 0.
										O	**MC_2A —** Motor control PWM channel 2, output A.
										I/O	**SSP0_SSEL —** Slave Select for SSP0.
										O	**LCD_VD[14] —** LCD data.
										O	**LCD_VD[22] —** LCD data.

All information provided in this document is subject to legal disclaimers.

© NXP Semiconductors N.V. 2017. All rights reserved.

Table 3. Pin description *...continued*

Not all functions are available on all parts. See Table 2 (Ethernet, USB, LCD, QEI, SD/MMC, comparator pins) and Table 5 (EMC pins).

Symbol	Pin LQFP208	Ball TFBGA208	Ball TFBGA180	Pin LQFP144	Pin LQFP100	Pin LQFP80	Pin TFBGA80		Reset state[1]	Type[2]	Description
P1[29]	92	U14	N10	64	45	36	K8	[3]	I; PU	I/O	**P1[29] —** General purpose digital input/output pin.
										I/O	**USB_SDA1 —** USB port 1 I^2C serial data (OTG transceiver).
										I	**PWM1_CAP1 —** Capture input for PWM1, channel 1.
										O	**T0_MAT1 —** Match output for Timer 0, channel 1.
										O	**MC_2B —** Motor control PWM channel 2, output B.
										O	**U4_TXD —** Transmitter output for USART4 (input/output in smart card mode).
										O	**LCD_VD[15] —** LCD data.
										O	**LCD_VD[23] —** LCD data.
P1[30]	42	P2	K3	30	21	18	J2	[5]	I; PU	I/O	**P1[30] —** General purpose digital input/output pin.
										I	**USB_PWRD2 —** Power Status for USB port 2.
										I	**USB_VBUS —** Monitors the presence of USB bus power. This signal must be HIGH for USB reset to occur.
										I	**ADC0_IN[4] —** A/D converter 0, input 4. When configured as an ADC input, the digital function of the pin must be disabled.
										I/O	**I2C0_SDA —** I^2C0 data input/output (this pin does not use a specialized I2C pad.
										O	**U3_OE —** RS-485/EIA-485 output enable signal for UART3.
P1[31]	40	P1	K2	28	20	17	H2	[5]	I; PU	I/O	**P1[31] —** General purpose digital input/output pin.
										I	**$\overline{\text{USB_OVRCR2}}$ —** Over-Current status for USB port 2.
										I/O	**SSP1_SCK —** Serial Clock for SSP1.
										I	**ADC0_IN[5] —** A/D converter 0, input 5. When configured as an ADC input, the digital function of the pin must be disabled.
										I/O	**I2C0_SCL —** I^2C0 clock input/output (this pin does not use a specialized I2C pad.

All information provided in this document is subject to legal disclaimers.

© NXP Semiconductors N.V. 2017. All rights reserved.

Table 3. Pin description *...continued*

Not all functions are available on all parts. See Table 2 (Ethernet, USB, LCD, QEI, SD/MMC, comparator pins) and Table 5 (EMC pins).

Symbol	Pin LQFP208	Ball TFBGA208	Ball TFBGA180	Pin LQFP144	Pin LQFP100	Pin LQFP80	Pin TFBGA80		Reset state[1]	Type[2]	Description
P2[0] to P2[31]										I/O	**Port 2:** Port 2 is a 32 bit I/O port with individual direction controls for each bit. The operation of port 1 pins depends upon the pin function selected via the pin connect block.
P2[0]	154	B17	D12	107	75	60	B10	[3]	I; PU	I/O	**P2[0] —** General purpose digital input/output pin.
										O	**PWM1[1] —** Pulse Width Modulator 1, channel 1 output.
										O	**U1_TXD —** Transmitter output for UART1.
										-	**R —** Function reserved.
										-	**R —** Function reserved.
										-	**R —** Function reserved.
										-	**R —** Function reserved.
										O	**LCD_PWR —** LCD panel power enable.
P2[1]	152	E14	C14	106	74	59	B8	[3]	I; PU	I/O	**P2[1] —** General purpose digital input/output pin.
										O	**PWM1[2] —** Pulse Width Modulator 1, channel 2 output.
										I	**U1_RXD —** Receiver input for UART1.
										-	**R —** Function reserved.
										-	**R —** Function reserved.
										-	**R —** Function reserved.
										-	**R —** Function reserved.
										O	**LCD_LE —** Line end signal.
P2[2]	150	D15	E11	105	73	58	B9	[3]	I; PU	I/O	**P2[2] —** General purpose digital input/output pin.
										O	**PWM1[3] —** Pulse Width Modulator 1, channel 3 output.
										I	**U1_CTS —** Clear to Send input for UART1.
										O	**T2_MAT3 —** Match output for Timer 2, channel 3.
										-	**R —** Function reserved.
										O	**TRACEDATA[3] —** Trace data, bit 3.
										-	**R —** Function reserved.
										O	**LCD_DCLK —** LCD panel clock.

All information provided in this document is subject to legal disclaimers.

© NXP Semiconductors N.V. 2017. All rights reserved.

Table 3. Pin description *...continued*

Not all functions are available on all parts. See Table 2 (Ethernet, USB, LCD, QEI, SD/MMC, comparator pins) and Table 5 (EMC pins).

Symbol	Pin LQFP208	Ball TFBGA208	Ball TFBGA180	Pin LQFP144	Pin LQFP100	Pin LQFP80	Pin TFBGA80		Reset state[1]	Type[2]	Description
P2[3]	144	E16	E13	100	70	55	C10	[3]	I; PU	I/O	**P2[3] —** General purpose digital input/output pin.
										O	**PWM1[4] —** Pulse Width Modulator 1, channel 4 output.
										I	**U1_DCD —** Data Carrier Detect input for UART1.
										O	**T2_MAT2 —** Match output for Timer 2, channel 2.
										-	**R —** Function reserved.
										O	**TRACEDATA[2] —** Trace data, bit 2.
										-	**R —** Function reserved.
										O	**LCD_FP —** Frame pulse (STN). Vertical synchronization pulse (TFT).
P2[4]	142	D17	E14	99	69	54	C9	[3]	I; PU	I/O	**P2[4] —** General purpose digital input/output pin.
										O	**PWM1[5] —** Pulse Width Modulator 1, channel 5 output.
										I	**U1_DSR —** Data Set Ready input for UART1.
										O	**T2_MAT1 —** Match output for Timer 2, channel 1.
										-	**R —** Function reserved.
										O	**TRACEDATA[1] —** Trace data, bit 1.
										-	**R —** Function reserved.
										O	**LCD_ENAB_M —** STN AC bias drive or TFT data enable output.

All information provided in this document is subject to legal disclaimers.

© NXP Semiconductors N.V. 2017. All rights reserved.

Table 3. Pin description *...continued*

Not all functions are available on all parts. See Table 2 (Ethernet, USB, LCD, QEI, SD/MMC, comparator pins) and Table 5 (EMC pins).

Symbol	Pin LQFP208	Ball TFBGA208	Ball TFBGA180	Pin LQFP144	Pin LQFP100	Pin LQFP80	Pin TFBGA80		Reset state[1]	Type[2]	Description
P2[5]	140	F16	F12	97	68	53	D10	[3]	I; PU	I/O	**P2[5] —** General purpose digital input/output pin.
										O	**PWM1[6] —** Pulse Width Modulator 1, channel 6 output.
										O	**U1_DTR —** Data Terminal Ready output for UART1. Can also be configured to be an RS-485/EIA-485 output enable signal for UART1.
										O	**T2_MAT0 —** Match output for Timer 2, channel 0.
										-	**R —** Function reserved.
										O	**TRACEDATA[0] —** Trace data, bit 0.
										-	**R —** Function reserved.
										O	**LCD_LP —** Line synchronization pulse (STN). Horizontal synchronization pulse (TFT).
P2[6]	138	E17	F13	96	67	52	E8	[3]	I; PU	I/O	**P2[6] —** General purpose digital input/output pin.
										I	**PWM1_CAP0 —** Capture input for PWM1, channel 0.
										I	**U1_RI —** Ring Indicator input for UART1.
										I	**T2_CAP0 —** Capture input for Timer 2, channel 0.
										O	**U2_OE —** RS-485/EIA-485 output enable signal for UART2.
										O	**TRACECLK —** Trace clock.
										O	**LCD_VD[0] —** LCD data.
										O	**LCD_VD[4] —** LCD data.

All information provided in this document is subject to legal disclaimers.

© NXP Semiconductors N.V. 2017. All rights reserved.

Table 3. Pin description *...continued*

Not all functions are available on all parts. See Table 2 (Ethernet, USB, LCD, QEI, SD/MMC, comparator pins) and Table 5 (EMC pins).

Symbol	Pin LQFP208	Ball TFBGA208	Ball TFBGA180	Pin LQFP144	Pin LQFP100	Pin LQFP80	Pin TFBGA80		Reset state[1]	Type[2]	Description
P2[7]	136	G16	G11	95	66	51	D9	[3]	I; PU	I/O	**P2[7] —** General purpose digital input/output pin.
										I	**CAN_RD2 —** CAN2 receiver input.
										O	**U1_RTS —** Request to Send output for UART1. Can also be configured to be an RS-485/EIA-485 output enable signal for UART1.
										-	**R —** Function reserved.
										-	**R —** Function reserved.
										O	**$\overline{\text{SPIFI_CS}}$ —** Chip select output for SPIFI.
										O	**LCD_VD[1] —** LCD data.
										O	**LCD_VD[5] —** LCD data.
P2[8]	134	H15	G14	93	65	50	E9	[3]	I; PU	I/O	**P2[8] —** General purpose digital input/output pin.
										O	**CAN_TD2 —** CAN2 transmitter output.
										O	**U2_TXD —** Transmitter output for UART2.
										I	**U1_CTS —** Clear to Send input for UART1.
										O	**ENET_MDC —** Ethernet MIIM clock.
										-	**R —** Function reserved.
										O	**LCD_VD[2] —** LCD data.
										O	**LCD_VD[6] —** LCD data.

All information provided in this document is subject to legal disclaimers.

© NXP Semiconductors N.V. 2017. All rights reserved.

Table 3. Pin description *...continued*

Not all functions are available on all parts. See Table 2 (Ethernet, USB, LCD, QEI, SD/MMC, comparator pins) and Table 5 (EMC pins).

Symbol	Pin LQFP208	Ball TFBGA208	Ball TFBGA180	Pin LQFP144	Pin LQFP100	Pin LQFP80	Pin TFBGA80		Reset state[1]	Type[2]	Description
P2[9]	132	H16	H11	92	64	49	E10	[3]	I; PU	I/O	**P2[9] —** General purpose digital input/output pin.
										O	**USB_CONNECT1 —** USB1 SoftConnect control. Signal used to switch an external 1.5 kΩ resistor under the software control. Used with the SoftConnect USB feature.
										I	**U2_RXD —** Receiver input for UART2.
										I	**U4_RXD —** Receiver input for USART4.
										I/O	**ENET_MDIO —** Ethernet MIIM data input and output.
										-	**R —** Function reserved.
										I	**LCD_VD[3] —** LCD data.
										I	**LCD_VD[7] —** LCD data.
P2[10]	110	N15	M13	76	53	41	H9	[10]	I; PU	I/O	**P2[10] —** General purpose digital input/output pin. This pin includes a 10 ns input glitch filter. A LOW on this pin while RESET is LOW forces the on-chip boot loader to take over control of the part after a reset and go into ISP mode.
										I	**$\overline{\text{EINT0}}$ —** External interrupt 0 input.
										I	**NMI —** Non-maskable interrupt input.
P2[11]	108	T17	M12	75	52	-	-	[10]	I; PU	I/O	**P2[11] —** General purpose digital input/output pin. This pin includes a 10 ns input glitch filter.
										I	**$\overline{\text{EINT1}}$ —** External interrupt 1 input.
										I/O	**SD_DAT[1] —** Data line 1 for SD card interface.
										I/O	**I2S_TX_SCK —** Transmit Clock. It is driven by the master and received by the slave. Corresponds to the signal SCK in the *I^2S-bus specification*.
										-	**R —** Function reserved.
										-	**R —** Function reserved.
										-	**R —** Function reserved.
										O	**LCD_CLKIN —** LCD clock.

All information provided in this document is subject to legal disclaimers.

© NXP Semiconductors N.V. 2017. All rights reserved.

Table 3. Pin description *...continued*

Not all functions are available on all parts. See Table 2 (Ethernet, USB, LCD, QEI, SD/MMC, comparator pins) and Table 5 (EMC pins).

Symbol	Pin LQFP208	Ball TFBGA208	Ball TFBGA180	Pin LQFP144	Pin LQFP100	Pin LQFP80	Pin TFBGA80		Reset state[1]	Type[2]	Description
P2[12]	106	N14	N14	73	51	-	-	[10]	I; PU	I/O	**P2[12] —** General purpose digital input/output pin. This pin includes a 10 ns input glitch filter.
										I	**$\overline{\text{EINT2}}$ —** External interrupt 2 input.
										I/O	**SD_DAT[2] —** Data line 2 for SD card interface.
										I/O	**I2S_TX_WS —** Transmit Word Select. It is driven by the master and received by the slave. Corresponds to the signal WS in the *I^2S-bus specification*.
										O	**LCD_VD[4] —** LCD data.
										O	**LCD_VD[3] —** LCD data.
										O	**LCD_VD[8] —** LCD data.
										O	**LCD_VD[18] —** LCD data.
P2[13]	102	T16	M11	71	50	-	-	[10]	I; PU	I/O	**P2[13] —** General purpose digital input/output pin. This pin includes a 10 ns input glitch filter.
										I	**$\overline{\text{EINT3}}$ —** External interrupt 3 input.
										I/O	**SD_DAT[3] —** Data line 3 for SD card interface.
										I/O	**I2S_TX_SDA —** Transmit data. It is driven by the transmitter and read by the receiver. Corresponds to the signal SD in the *I^2S-bus specification*.
										-	**R —** Function reserved.
										O	**LCD_VD[5] —** LCD data.
										O	**LCD_VD[9] —** LCD data.
										O	**LCD_VD[19] —** LCD data.
P2[14]	91	R12	-	-	-	-	-	[3]	I; PU	I/O	**P2[14] —** General purpose digital input/output pin.
										O	**$\overline{\text{EMC_CS2}}$ —** LOW active Chip Select 2 signal.
										I/O	**I2C1_SDA —** I^2C1 data input/output (this pin does not use a specialized I2C pad).
										I	**T2_CAP0 —** Capture input for Timer 2, channel 0.

All information provided in this document is subject to legal disclaimers.

© NXP Semiconductors N.V. 2017. All rights reserved.

Table 3. Pin description *...continued*

Not all functions are available on all parts. See Table 2 (Ethernet, USB, LCD, QEI, SD/MMC, comparator pins) and Table 5 (EMC pins).

Symbol	Pin LQFP208	Ball TFBGA208	Ball TFBGA180	Pin LQFP144	Pin LQFP100	Pin LQFP80	Pin TFBGA80		Reset state[1]	Type[2]	Description
P2[15]	99	P13	-	-	-	-	-	[3]	I; PU	I/O	**P2[15] —** General purpose digital input/output pin.
										O	**$\overline{\text{EMC_CS3}}$ —** LOW active Chip Select 3 signal.
										I/O	**I2C1_SCL —** I^2C1 clock input/output (this pin does not use a specialized I2C pad).
										I	**T2_CAP1 —** Capture input for Timer 2, channel 1.
P2[16]	87	R11	P9	-	-	-	-	[3]	I; PU	I/O	**P2[16] —** General purpose digital input/output pin.
										O	**$\overline{\text{EMC_CAS}}$ —** LOW active SDRAM Column Address Strobe.
P2[17]	95	R13	P11	-	-	-	-	[3]	I; PU	I/O	**P2[17] —** General purpose digital input/output pin.
										O	**$\overline{\text{EMC_RAS}}$ —** LOW active SDRAM Row Address Strobe.
P2[18]	59	U3	P3	-	-	-	-	[6]	I; PU	I/O	**P2[18] —** General purpose digital input/output pin.
										O	**EMC_CLK[0] —** SDRAM clock 0.
P2[19]	67	R7	N5	-	-	-	-	[6]	I; PU	I/O	**P2[19] —** General purpose digital input/output pin.
										O	**EMC_CLK[1] —** SDRAM clock 1.
P2[20]	73	T8	P6	-	-	-	-	[3]	I; PU	I/O	**P2[20] —** General purpose digital input/output pin.
										O	**$\overline{\text{EMC_DYCS0}}$ —** SDRAM chip select 0.
P2[21]	81	U11	N8	-	-	-	-	[3]	I; PU	I/O	**P2[21] —** General purpose digital input/output pin.
										O	**$\overline{\text{EMC_DYCS1}}$ —** SDRAM chip select 1.
P2[22]	85	U12	-	-	-	-	-	[3]	I; PU	I/O	**P2[22] —** General purpose digital input/output pin.
										O	**$\overline{\text{EMC_DYCS2}}$ —** SDRAM chip select 2.
										I/O	**SSP0_SCK —** Serial clock for SSP0.
										I	**T3_CAP0 —** Capture input for Timer 3, channel 0.
P2[23]	64	U5	-	-	-	-	-	[3]	I; PU	I/O	**P2[23] —** General purpose digital input/output pin.
										O	**$\overline{\text{EMC_DYCS3}}$ —** SDRAM chip select 3.
										I/O	**SSP0_SSEL —** Slave Select for SSP0.
										I	**T3_CAP1 —** Capture input for Timer 3, channel 1.

All information provided in this document is subject to legal disclaimers.

© NXP Semiconductors N.V. 2017. All rights reserved.

Table 3. Pin description *...continued*

Not all functions are available on all parts. See Table 2 (Ethernet, USB, LCD, QEI, SD/MMC, comparator pins) and Table 5 (EMC pins).

Symbol	Pin LQFP208	Ball TFBGA208	Ball TFBGA180	Pin LQFP144	Pin LQFP100	Pin LQFP80	Pin TFBGA80		Reset state[1]	Type[2]	Description
P2[24]	53	P5	P1	-	-	-	-	[3]	I; PU	I/O	**P2[24] —** General purpose digital input/output pin.
										O	**EMC_CKE0 —** SDRAM clock enable 0.
P2[25]	54	R4	P2	-	-	-	-	[3]	I; PU	I/O	**P2[25] —** General purpose digital input/output pin.
										O	**EMC_CKE1 —** SDRAM clock enable 1.
P2[26]	57	T4	-	-	-	-	-	[3]	I; PU	I/O	**P2[26] —** General purpose digital input/output pin.
										O	**EMC_CKE2 —** SDRAM clock enable 2.
										I/O	**SSP0_MISO —** Master In Slave Out for SSP0.
										O	**T3_MAT0 —** Match output for Timer 3, channel 0.
P2[27]	47	P3	-	-	-	-	-	[3]	I; PU	I/O	**P2[27] —** General purpose digital input/output pin.
										O	**EMC_CKE3 —** SDRAM clock enable 3.
										I/O	**SSP0_MOSI —** Master Out Slave In for SSP0.
										O	**T3_MAT1 —** Match output for Timer 3, channel 1.
P2[28]	49	P4	M2	-	-	-	-	[3]	I; PU	I/O	**P2[28] —** General purpose digital input/output pin.
										O	**EMC_DQM0 —** Data mask 0 used with SDRAM and static devices.
P2[29]	43	N3	L1	-	-	-	-	[3]	I; PU	I/O	**P2[29] —** General purpose digital input/output pin.
										O	**EMC_DQM1 —** Data mask 1 used with SDRAM and static devices.
P2[30]	31	L4	-	-	-	-	-	[3]	I; PU	I/O	**P2[30] —** General purpose digital input/output pin.
										O	**EMC_DQM2 —** Data mask 2 used with SDRAM and static devices.
										I/O	**I2C2_SDA —** I^2C2 data input/output (this pin does not use a specialized I2C pad).
										O	**T3_MAT2 —** Match output for Timer 3, channel 2.

All information provided in this document is subject to legal disclaimers.

© NXP Semiconductors N.V. 2017. All rights reserved.

Table 3. Pin description *...continued*

Not all functions are available on all parts. See Table 2 (Ethernet, USB, LCD, QEI, SD/MMC, comparator pins) and Table 5 (EMC pins).

Symbol	Pin LQFP208	Ball TFBGA208	Ball TFBGA180	Pin LQFP144	Pin LQFP100	Pin LQFP80	Pin TFBGA80		Reset state[1]	Type[2]	Description
P2[31]	39	N2	-	-	-	-	-	[3]	I; PU	I/O	**P2[31] —** General purpose digital input/output pin.
										O	**EMC_DQM3 —** Data mask 3 used with SDRAM and static devices.
										I/O	**I2C2_SCL —** I^2C2 clock input/output (this pin does not use a specialized I2C pad).
										O	**T3_MAT3 —** Match output for Timer 3, channel 3.
P3[0] to P3[31]										I/O	**Port 3:** Port 3 is a 32-bit I/O port with individual direction controls for each bit. The operation of port 3 pins depends upon the pin function selected via the pin connect block.
P3[0]	197	B4	D6	137	-	-	-	[3]	I; PU	I/O	**P3[0] —** General purpose digital input/output pin.
										I/O	**EMC_D[0] —** External memory data line 0.
P3[1]	201	B3	E6	140	-	-	-	[3]	I; PU	I/O	**P3[1] —** General purpose digital input/output pin.
										I/O	**EMC_D[1] —** External memory data line 1.
P3[2]	207	B1	A2	144	-	-	-	[3]	I; PU	I/O	**P3[2] —** General purpose digital input/output pin.
										I/O	**EMC_D[2] —** External memory data line 2.
P3[3]	3	E4	G5	2	-	-	-	[3]	I; PU	I/O	**P3[3] —** General purpose digital input/output pin.
										I/O	**EMC_D[3] —** External memory data line 3.
P3[4]	13	F2	D3	9	-	-	-	[3]	I; PU	I/O	**P3[4] —** General purpose digital input/output pin.
										I/O	**EMC_D[4] —** External memory data line 4.
P3[5]	17	G1	E3	12	-	-	-	[3]	I; PU	I/O	**P3[5] —** General purpose digital input/output pin.
										I/O	**EMC_D[5] —** External memory data line 5.
P3[6]	23	J1	F4	16	-	-	-	[3]	I; PU	I/O	**P3[6] —** General purpose digital input/output pin.
										I/O	**EMC_D[6] —** External memory data line 6.
P3[7]	27	L1	G3	19	-	-	-	[3]	I; PU	I/O	**P3[7] —** General purpose digital input/output pin.
										I/O	**EMC_D[7] —** External memory data line 7.
P3[8]	191	D8	A6	-	-	-	-	[3]	I; PU	I/O	**P3[8] —** General purpose digital input/output pin.
										I/O	**EMC_D[8] —** External memory data line 8.

All information provided in this document is subject to legal disclaimers.

© NXP Semiconductors N.V. 2017. All rights reserved.

Table 3. Pin description *...continued*

Not all functions are available on all parts. See Table 2 (Ethernet, USB, LCD, QEI, SD/MMC, comparator pins) and Table 5 (EMC pins).

Symbol	Pin LQFP208	Ball TFBGA208	Ball TFBGA180	Pin LQFP144	Pin LQFP100	Pin LQFP80	Pin TFBGA80		Reset state[1]	Type[2]	Description
P3[9]	199	C5	A4	-	-	-	-	[3]	I; PU	I/O	**P3[9] —** General purpose digital input/output pin.
										I/O	**EMC_D[9] —** External memory data line 9.
P3[10]	205	B2	B3	-	-	-	-	[3]	I; PU	I/O	**P3[10] —** General purpose digital input/output pin.
										I/O	**EMC_D[10] —** External memory data line 10.
P3[11]	208	D5	B2	-	-	-	-	[3]	I; PU	I/O	**P3[11] —** General purpose digital input/output pin.
										I/O	**EMC_D[11] —** External memory data line 11.
P3[12]	1	D4	A1	-	-	-	-	[3]	I; PU	I/O	**P3[12] —** General purpose digital input/output pin.
										I/O	**EMC_D[12] —** External memory data line 12.
P3[13]	7	C1	C1	-	-	-	-	[3]	I; PU	I/O	**P3[13] —** General purpose digital input/output pin.
										I/O	**EMC_D[13] —** External memory data line 13.
P3[14]	21	H2	F1	-	-	-	-	[3]	I; PU	I/O	**P3[14] —** General purpose digital input/output pin.
										I/O	**EMC_D[14] —** External memory data line 14.
P3[15]	28	M1	G4	-	-	-	-	[3]	I; PU	I/O	**P3[15] —** General purpose digital input/output pin.
										I/O	**EMC_D[15] —** External memory data line 15.
P3[16]	137	F17	-	-	-	-	-	[3]	I; PU	I/O	**P3[16] —** General purpose digital input/output pin.
										I/O	**EMC_D[16] —** External memory data line 16.
										O	**PWM0[1] —** Pulse Width Modulator 0, output 1.
										O	**U1_TXD —** Transmitter output for UART1.
P3[17]	143	F15	-	-	-	-	-	[3]	I; PU	I/O	**P3[17] —** General purpose digital input/output pin.
										I/O	**EMC_D[17] —** External memory data line 17.
										O	**PWM0[2] —** Pulse Width Modulator 0, output 2.
										I	**U1_RXD —** Receiver input for UART1.
P3[18]	151	C15	-	-	-	-	-	[3]	I; PU	I/O	**P3[18] —** General purpose digital input/output pin.
										I/O	**EMC_D[18] —** External memory data line 18.
										O	**PWM0[3] —** Pulse Width Modulator 0, output 3.
										I	**U1_CTS —** Clear to Send input for UART1.

All information provided in this document is subject to legal disclaimers.

© NXP Semiconductors N.V. 2017. All rights reserved.

Table 3. Pin description *...continued*

Not all functions are available on all parts. See Table 2 (Ethernet, USB, LCD, QEI, SD/MMC, comparator pins) and Table 5 (EMC pins).

Symbol	Pin LQFP208	Ball TFBGA208	Ball TFBGA180	Pin LQFP144	Pin LQFP100	Pin LQFP80	Pin TFBGA80		Reset state[1]	Type[2]	Description
P3[19]	161	B14	-	-	-	-	-	[3]	I; PU	I/O	**P3[19] —** General purpose digital input/output pin.
										I/O	**EMC_D[19] —** External memory data line 19.
										O	**PWM0[4] —** Pulse Width Modulator 0, output 4.
										I	**U1_DCD —** Data Carrier Detect input for UART1.
P3[20]	167	A13	-	-	-	-	-	[3]	I; PU	I/O	**P3[20] —** General purpose digital input/output pin.
										I/O	**EMC_D[20] —** External memory data line 20.
										O	**PWM0[5] —** Pulse Width Modulator 0, output 5.
										I	**U1_DSR —** Data Set Ready input for UART1.
P3[21]	175	C10	-	-	-	-	-	[3]	I; PU	I/O	**P3[21] —** General purpose digital input/output pin.
										I/O	**EMC_D[21] —** External memory data line 21.
										O	**PWM0[6] —** Pulse Width Modulator 0, output 6.
										O	**U1_DTR —** Data Terminal Ready output for UART1. Can also be configured to be an RS-485/EIA-485 output enable signal for UART1.
P3[22]	195	C6	-	-	-	-	-	[3]	I; PU	I/O	**P3[22] —** General purpose digital input/output pin.
										I/O	**EMC_D[22] —** External memory data line 22.
										I	**PWM0_CAP0 —** Capture input for PWM0, channel 0.
										I	**U1_RI —** Ring Indicator input for UART1.
P3[23]	65	T6	M4	45	-	-	-	[3]	I; PU	I/O	**P3[23] —** General purpose digital input/output pin.
										I/O	**EMC_D[23] —** External memory data line 23.
										I	**PWM1_CAP0 —** Capture input for PWM1, channel 0.
										I	**T0_CAP0 —** Capture input for Timer 0, channel 0.
P3[24]	58	R5	N3	40	-	-	-	[3]	I; PU	I/O	**P3[24] —** General purpose digital input/output pin.
										I/O	**EMC_D[24] —** External memory data line 24.
										O	**PWM1[1] —** Pulse Width Modulator 1, output 1.
										I	**T0_CAP1 —** Capture input for Timer 0, channel 1.

All information provided in this document is subject to legal disclaimers.

© NXP Semiconductors N.V. 2017. All rights reserved.

Table 3. Pin description *...continued*

Not all functions are available on all parts. See Table 2 (Ethernet, USB, LCD, QEI, SD/MMC, comparator pins) and Table 5 (EMC pins).

Symbol	Pin LQFP208	Ball TFBGA208	Ball TFBGA180	Pin LQFP144	Pin LQFP100	Pin LQFP80	Pin TFBGA80		Reset state[1]	Type[2]	Description
P3[25]	56	U2	M3	39	27	-	-	[3]	I; PU	I/O	**P3[25] —** General purpose digital input/output pin.
										I/O	**EMC_D[25] —** External memory data line 25.
										O	**PWM1[2] —** Pulse Width Modulator 1, output 2.
										O	**T0_MAT0 —** Match output for Timer 0, channel 0.
P3[26]	55	T3	K7	38	26	-	-	[3]	I; PU	I/O	**P3[26] —** General purpose digital input/output pin.
										I/O	**EMC_D[26] —** External memory data line 26.
										O	**PWM1[3] —** Pulse Width Modulator 1, output 3.
										O	**T0_MAT1 —** Match output for Timer 0, channel 1.
										I	**STCLK —** System tick timer clock input. The maximum STCLK frequency is 1/4 of the ARM processor clock frequency CCLK.
P3[27]	203	A1	-	-	-	-	-	[3]	I; PU	I/O	**P3[27] —** General purpose digital input/output pin.
										I/O	**EMC_D[27] —** External memory data line 27.
										O	**PWM1[4] —** Pulse Width Modulator 1, output 4.
										I	**T1_CAP0 —** Capture input for Timer 1, channel 0.
P3[28]	5	D2	-	-	-	-	-	[3]	I; PU	I/O	**P3[28] —** General purpose digital input/output pin.
										I/O	**EMC_D[28] —** External memory data line 28.
										O	**PWM1[5] —** Pulse Width Modulator 1, output 5.
										I	**T1_CAP1 —** Capture input for Timer 1, channel 1.
P3[29]	11	F3	-	-	-	-	-	[3]	I; PU	I/O	**P3[29] —** General purpose digital input/output pin.
										I/O	**EMC_D[29] —** External memory data line 29.
										O	**PWM1[6] —** Pulse Width Modulator 1, output 6.
										O	**T1_MAT0 —** Match output for Timer 1, channel 0.

All information provided in this document is subject to legal disclaimers.

© NXP Semiconductors N.V. 2017. All rights reserved.

Table 3. Pin description *...continued*

Not all functions are available on all parts. See Table 2 (Ethernet, USB, LCD, QEI, SD/MMC, comparator pins) and Table 5 (EMC pins).

Symbol	Pin LQFP208	Ball TFBGA208	Ball TFBGA180	Pin LQFP144	Pin LQFP100	Pin LQFP80	Pin TFBGA80		Reset state[1]	Type[2]	Description
P3[30]	19	H3	-	-	-	-	-	[3]	I; PU	I/O	**P3[30] —** General purpose digital input/output pin.
										I/O	**EMC_D[30] —** External memory data line 30.
										O	**U1_RTS —** Request to Send output for UART1. Can also be configured to be an RS-485/EIA-485 output enable signal for UART1.
										O	**T1_MAT1 —** Match output for Timer 1, channel 1.
P3[31]	25	J3	-	-	-	-	-	[3]	I; PU	I/O	**P3[31] —** General purpose digital input/output pin.
										I/O	**EMC_D[31] —** External memory data line 31.
										-	**R —** Function reserved.
										O	**T1_MAT2 —** Match output for Timer 1, channel 2.
P4[0] to P4[31]							-			I/O	**Port 4:** Port 4 is a 32-bit I/O port with individual direction controls for each bit. The operation of port 4 pins depends upon the pin function selected via the pin connect block.
P4[0]	75	U9	L6	52	-	-	-	[3]	I; PU	I/O	**P4[0] —** General purpose digital input/output pin.
										I/O	**EMC_A[0] —** External memory address line 0.
P4[1]	79	U10	M7	55	-	-	-	[3]	I; PU	I/O	**P4[1] —** General purpose digital input/output pin.
										I/O	**EMC_A[1] —** External memory address line 1.
P4[2]	83	T11	M8	58	-	-	-	[3]	I; PU	I/O	**P4[2] —** General purpose digital input/output pin.
										I/O	**EMC_A[2] —** External memory address line 2.
P4[3]	97	U16	K9	68	-	-	-	[3]	I; PU	I/O	**P4[3] —** General purpose digital input/output pin.
										I/O	**EMC_A[3] —** External memory address line 3.
P4[4]	103	R15	P13	72	-	-	-	[3]	I; PU	I/O	**P4[4] —** General purpose digital input/output pin.
										I/O	**EMC_A[4] —** External memory address line 4.
P4[5]	107	R16	H10	74	-	-	-	[3]	I; PU	I/O	**P4[5] —** General purpose digital input/output pin.
										I/O	**EMC_A[5] —** External memory address line 5.
P4[6]	113	M14	K10	78	-	-	-	[3]	I; PU	I/O	**P4[6] —** General purpose digital input/output pin.
										I/O	**EMC_A[6] —** External memory address line 6.

All information provided in this document is subject to legal disclaimers.

© NXP Semiconductors N.V. 2017. All rights reserved.

Table 3. Pin description *...continued*

Not all functions are available on all parts. See Table 2 (Ethernet, USB, LCD, QEI, SD/MMC, comparator pins) and Table 5 (EMC pins).

Symbol	Pin LQFP208	Ball TFBGA208	Ball TFBGA180	Pin LQFP144	Pin LQFP100	Pin LQFP80	Pin TFBGA80		Reset state[1]	Type[2]	Description
P4[7]	121	L16	K12	84	-	-	-	[3]	I; PU	I/O	**P4[7] —** General purpose digital input/output pin.
										I/O	**EMC_A[7] —** External memory address line 7.
P4[8]	127	J17	J11	88	-	-	-	[3]	I; PU	I/O	**P4[8] —** General purpose digital input/output pin.
										I/O	**EMC_A[8] —** External memory address line 8.
P4[9]	131	H17	H12	91	-	-	-	[3]	I; PU	I/O	**P4[9] —** General purpose digital input/output pin.
										I/O	**EMC_A[9] —** External memory address line 9.
P4[10]	135	G17	G12	94	-	-	-	[3]	I; PU	I/O	**P4[10] —** General purpose digital input/output pin.
										I/O	**EMC_A[10] —** External memory address line 10.
P4[11]	145	F14	F11	101	-	-	-	[3]	I; PU	I/O	**P4[11] —** General purpose digital input/output pin.
										I/O	**EMC_A[11] —** External memory address line 11.
P4[12]	149	C16	F10	104	-	-	-	[3]	I; PU	I/O	**P4[12] —** General purpose digital input/output pin.
										I/O	**EMC_A[12] —** External memory address line 12.
P4[13]	155	B16	B14	108	-	-	-	[3]	I; PU	I/O	**P4[13] —** General purpose digital input/output pin.
										I/O	**EMC_A[13] —** External memory address line 13.
P4[14]	159	B15	E8	110	-	-	-	[3]	I; PU	I/O	**P4[14] —** General purpose digital input/output pin.
										I/O	**EMC_A[14] —** External memory address line 14.
P4[15]	173	A11	C10	120	-	-	-	[3]	I; PU	I/O	**P4[15] —** General purpose digital input/output pin.
										I/O	**EMC_A[15] —** External memory address line 15.
P4[16]	101	U17	N12	-	-	-	-	[3]	I; PU	I/O	**P4[16] —** General purpose digital input/output pin.
										I/O	**EMC_A[16] —** External memory address line 16.
P4[17]	104	P14	N13	-	-	-	-	[3]	I; PU	I/O	**P4[17] —** General purpose digital input/output pin.
										I/O	**EMC_A[17] —** External memory address line 17.
P4[18]	105	P15	P14	-	-	-	-	[3]	I; PU	I/O	**P4[18] —** General purpose digital input/output pin.
										I/O	**EMC_A[18] —** External memory address line 18.
P4[19]	111	P16	M14	-	-	-	-	[3]	I; PU	I/O	**P4[19] —** General purpose digital input/output pin.
										I/O	**EMC_A[19] —** External memory address line 19.

All information provided in this document is subject to legal disclaimers.

© NXP Semiconductors N.V. 2017. All rights reserved.

Table 3. Pin description *...continued*

Not all functions are available on all parts. See Table 2 (Ethernet, USB, LCD, QEI, SD/MMC, comparator pins) and Table 5 (EMC pins).

Symbol	Pin LQFP208	Ball TFBGA208	Ball TFBGA180	Pin LQFP144	Pin LQFP100	Pin LQFP80	Pin TFBGA80		Reset state[1]	Type[2]	Description
P4[20]	109	R17	-	-	-	-	-	[3]	I; PU	I/O	**P4[20] —** General purpose digital input/output pin.
										I/O	**EMC_A[20] —** External memory address line 20.
										I/O	**I2C2_SDA —** I^2C2 data input/output (this pin does not use a specialized I2C pad).
										I/O	**SSP1_SCK —** Serial Clock for SSP1.
P4[21]	115	M15	-	-	-	-	-	[3]	I; PU	I/O	**P4[21] —** General purpose digital input/output pin.
										I/O	**EMC_A[21] —** External memory address line 21.
										I/O	**I2C2_SCL —** I^2C2 clock input/output (this pin does not use a specialized I2C pad).
										I/O	**SSP1_SSEL —** Slave Select for SSP1.
P4[22]	123	K14	-	-	-	-	-	[3]	I; PU	I/O	**P4[22] —** General purpose digital input/output pin.
										I/O	**EMC_A[22] —** External memory address line 22.
										O	**U2_TXD —** Transmitter output for UART2.
										I/O	**SSP1_MISO —** Master In Slave Out for SSP1.
P4[23]	129	J15	-	-	-	-	-	[3]	I; PU	I/O	**P4[23] —** General purpose digital input/output pin.
										I/O	**EMC_A[23] —** External memory address line 23.
										I	**U2_RXD —** Receiver input for UART2.
										I/O	**SSP1_MOSI —** Master Out Slave In for SSP1.
P4[24]	183	B8	C8	127	-	-	-	[3]	I; PU	I/O	**P4[24] —** General purpose digital input/output pin.
										O	**$\overline{\text{EMC_OE}}$ —** LOW active Output Enable signal.
P4[25]	179	B9	D9	124	-	-	-	[3]	I; PU	I/O	**P4[25] —** General purpose digital input/output pin.
										O	**$\overline{\text{EMC_WE}}$ —** LOW active Write Enable signal.
P4[26]	119	L15	K13	-	-	-	-	[3]	I; PU	I/O	**P4[26] —** General purpose digital input/output pin.
										O	**$\overline{\text{EMC_BLS0}}$ —** LOW active Byte Lane select signal 0.
P4[27]	139	G15	F14	-	-	-	-	[3]	I; PU	I/O	**P4[27] —** General purpose digital input/output pin.
										O	**$\overline{\text{EMC_BLS1}}$ —** LOW active Byte Lane select signal 1.

All information provided in this document is subject to legal disclaimers.

© NXP Semiconductors N.V. 2017. All rights reserved.

Table 3. Pin description *...continued*

Not all functions are available on all parts. See Table 2 (Ethernet, USB, LCD, QEI, SD/MMC, comparator pins) and Table 5 (EMC pins).

Symbol	Pin LQFP208	Ball TFBGA208	Ball TFBGA180	Pin LQFP144	Pin LQFP100	Pin LQFP80	Pin TFBGA80		Reset state[1]	Type[2]	Description
P4[28]	170	C11	D10	118	82	65	B7	[3]	I; PU	I/O	**P4[28] —** General purpose digital input/output pin.
										O	**$\overline{\text{EMC_BLS2}}$ —** LOW active Byte Lane select signal 2.
										O	**U3_TXD —** Transmitter output for UART3.
										O	**T2_MAT0 —** Match output for Timer 2, channel 0.
										-	**R —** Function reserved.
										O	**LCD_VD[6] —** LCD data.
										O	**LCD_VD[10] —** LCD data.
										O	**LCD_VD[2] —** LCD data.
P4[29]	176	B10	B9	122	85	68	A6	[3]	I; PU	I/O	**P4[29] —** General purpose digital input/output pin.
										O	**$\overline{\text{EMC_BLS3}}$ —** LOW active Byte Lane select signal 3.
										I	**U3_RXD —** Receiver input for UART3.
										O	**T2_MAT1 —** Match output for Timer 2, channel 1.
										I/O	**I2C2_SCL —** I^2C2 clock input/output (this pin does not use a specialized I2C pad).
										O	**LCD_VD[7] —** LCD data.
										O	**LCD_VD[11] —** LCD data.
										O	**LCD_VD[3] —** LCD data.
P4[30]	187	B7	C7	130	-	-	-	[3]	I; PU	I/O	**P4[30] —** General purpose digital input/output pin.
										O	**$\overline{\text{EMC_CS0}}$ —** LOW active Chip Select 0 signal.
										-	**R —** Function reserved.
										-	**R —** Function reserved.
										-	**R —** Function reserved.
										O	**CMP0_OUT —** Comparator 0, output.
P4[31]	193	A4	E7	134	-	-	-	[3]	I; PU	I/O	**P4[31] —** General purpose digital input/output pin.
										O	**$\overline{\text{EMC_CS1}}$ —** LOW active Chip Select 1 signal.

All information provided in this document is subject to legal disclaimers.

© NXP Semiconductors N.V. 2017. All rights reserved.

Table 3. Pin description *...continued*

Not all functions are available on all parts. See Table 2 (Ethernet, USB, LCD, QEI, SD/MMC, comparator pins) and Table 5 (EMC pins).

Symbol	Pin LQFP208	Ball TFBGA208	Ball TFBGA180	Pin LQFP144	Pin LQFP100	Pin LQFP80	Pin TFBGA80		Reset state[1]	Type[2]	Description
P5[0] to P5[4]										I/O	**Port 5:** Port 5 is a 5-bit I/O port with individual direction controls for each bit. The operation of port 5 pins depends upon the pin function selected via the pin connect block.
P5[0]	9	F4	E5	6	-	-	-	[3]	I; PU	I/O	**P5[0] —** General purpose digital input/output pin.
										I/O	**EMC_A[24] —** External memory address line 24.
										I/O	**SSP2_MOSI —** Master Out Slave In for SSP2.
										O	**T2_MAT2 —** Match output for Timer 2, channel 2.
P5[1]	30	J4	H1	21	-	-	G1	[3]	I; PU	I/O	**P5[1] —** General purpose digital input/output pin.
										I/O	**EMC_A[25] —** External memory address line 25.
										I/O	**SSP2_MISO —** Master In Slave Out for SSP2.
										O	**T2_MAT3 —** Match output for Timer 2, channel 3.
P5[2]	117	L14	L12	81	-	-	-	[11]	I	I/O	**P5[2] —** General purpose digital input/output pin.
										-	**R —** Function reserved.
										I/O	**SSP2_SCK —** Serial clock for SSP2. When using this pin, the SSP2 bit rate is limited to 1 MHz.
										O	**T3_MAT2 —** Match output for Timer 3, channel 2.
										-	**R —** Function reserved.
										I/O	**I2C0_SDA —** I^2C0 data input/output (this pin uses a specialized I^2C pad that supports I^2C Fast Mode Plus).
P5[3]	141	G14	G10	98	-	-	-	[11]	I	I/O	**P5[3] —** General purpose digital input/output pin.
										-	**R —** Function reserved.
										I/O	**SSP2_SSEL —** Slave select for SSP2. When using this pin, the SSP2 bit rate is limited to 1 MHz.
										-	**R —** Function reserved.
										I	**U4_RXD —** Receiver input for USART4.
										I/O	**I2C0_SCL —** I^2C0 clock input/output (this pin uses a specialized I^2C pad that supports I^2C Fast Mode Plus.

All information provided in this document is subject to legal disclaimers.

© NXP Semiconductors N.V. 2017. All rights reserved.

Table 3. Pin description *...continued*

Not all functions are available on all parts. See Table 2 (Ethernet, USB, LCD, QEI, SD/MMC, comparator pins) and Table 5 (EMC pins).

Symbol	Pin LQFP208	Ball TFBGA208	Ball TFBGA180	Pin LQFP144	Pin LQFP100	Pin LQFP80	Pin TFBGA80		Reset state[1]	Type[2]	Description
P5[4]	206	C3	C4	143	100	-	-	[3]	I; PU	I/O	**P5[4] —** General purpose digital input/output pin.
										O	**U0_OE —** RS-485/EIA-485 output enable signal for UART0.
										-	**R —** Function reserved.
										O	**T3_MAT3 —** Match output for Timer 3, channel 3.
										O	**U4_TXD —** Transmitter output for USART4 (input/output in smart card mode).
JTAG_TDO (SWO)	2	D3	B1	1	1	1	B2	[3]		O	Test Data Out for JTAG interface. Also used as Serial wire trace output.
JTAG_TDI	4	C2	C3	3	2	2	B1	[3]		I	Test Data In for JTAG interface.
JTAG_TMS (SWDIO)	6	E3	C2	4	3	3	C2	[3]		I	Test Mode Select for JTAG interface. Also used as Serial wire debug data input/output.
JTAG_$\overline{\text{TRST}}$	8	D1	D4	5	4	4	C1	[3]		I	Test Reset for JTAG interface.
JTAG_TCK (SWDCLK)	10	E2	D2	7	5	5	D3	[3]		I	Test Clock for JTAG interface. This clock must be slower than 1 /6 of the CPU clock (CCLK) for the JTAG interface to operate. Also used as serial wire clock.
$\overline{\text{RESET}}$	35	M2	J1	24	17	14	G3	[12]		I	External reset input with 20 ns glitch filter. A LOW-going pulse as short as 50 ns on this pin resets the device, causing I/O ports and peripherals to take on their default states, and processor execution to begin at address 0. This pin also serves as the debug select input. LOW level selects the JTAG boundary scan. HIGH level selects the ARM SWD debug mode.
$\overline{\text{RSTOUT}}$	29	K3	H2	20	14	11	F1	[3]		O	Reset status output. A LOW output on this pin indicates that the device is in the reset state for any reason. This reflects the RESET input pin and all internal reset sources.
RTC_ALARM	37	N1	H5	26	-	-	-	[13]		O	RTC controlled output. This is a 1.8 V pin. It goes HIGH when a RTC alarm is generated.
RTCX1	34	K2	J2	23	16	13	F2	[14] [15]		I	Input to the RTC 32 kHz ultra-low power oscillator circuit.

All information provided in this document is subject to legal disclaimers.

© NXP Semiconductors N.V. 2017. All rights reserved.

Table 3. Pin description *...continued*

Not all functions are available on all parts. See Table 2 (Ethernet, USB, LCD, QEI, SD/MMC, comparator pins) and Table 5 (EMC pins).

Symbol	Pin LQFP208	Ball TFBGA208	Ball TFBGA180	Pin LQFP144	Pin LQFP100	Pin LQFP80	Pin TFBGA80		Reset state[1]	Type[2]	Description
RTCX2	36	L2	J3	25	18	15	G2	[14] [15]		O	Output from the RTC 32 kHz ultra-low power oscillator circuit.
USB_D−2	52	U1	N2	37	-	-	-	[9]		I/O	USB port 2 bidirectional D− line.
VBAT	38	M3	K1	27	19	16	H1			I	RTC power supply: 3.3 V on this pin supplies power to the RTC.
$V_{DD(REG)(3V3)}$	26, 86, 174	H4, P11, D11	G1, N9, E9	18, 60, 121	13, 42, 84	34, 67	K7, C7			S	3.3 V regulator supply voltage: This is the power supply for the on-chip voltage regulator that supplies internal logic.
V_{DDA}	20	G4	F2	14	10	8	E3			S	Analog 3.3 V pad supply voltage: This can be connected to the same supply as $V_{DD(3V3)}$ but should be isolated to minimize noise and error. This voltage is used to power the ADC and DAC. Tie this pin to 3.3 V if the ADC and DAC are not used.
$V_{DD(3V3)}$	15, 60, 71, 89, 112, 125, 146, 165, 181, 198	G3, P6, P8, U13, P17, K16, C17, B13, C9, D7	E2, L4, K8, L11, J14, E12, E10, C5	41, 62, 77, 102, 114, 138	28, 54, 71, 96	21, 42, 56, 77	K2, H7, D8, C4			S	3.3 V supply voltage: This is the power supply voltage for I/O other than pins in the VBAT domain.
VREFP	24	K1	G2	17	12	10	E1			S	ADC positive reference voltage: This should be the same voltage as V_{DDA}, but should be isolated to minimize noise and error. The voltage level on this pin is used as a reference for ADC and DAC. Tie this pin to 3.3 V if the ADC and DAC are not used.

All information provided in this document is subject to legal disclaimers.

© NXP Semiconductors N.V. 2017. All rights reserved.

Table 3. Pin description *...continued*

Not all functions are available on all parts. See Table 2 (Ethernet, USB, LCD, QEI, SD/MMC, comparator pins) and Table 5 (EMC pins).

Symbol	Pin LQFP208	Ball TFBGA208	Ball TFBGA180	Pin LQFP144	Pin LQFP100	Pin LQFP80	Pin TFBGA80		Reset state[1]	Type[2]	Description
V_{SS}	33, 63, 77, 93, 114, 133, 148, 169, 189, 200	L3, T5, R9, P12, N16, H14, E15, A12, B6, A2	H4, P4, L9, L13, G13, D13, C11, B4	44, 65, 79, 103, 117, 139	31, 55, 72, 97	24, 43, 57, 78	H4, G8, G9, B3			G	Ground: 0 V reference for digital IO pins.
V_{SSREG}	32, 84, 172	D12, K4, P10	H3, L8, A10	22, 59, 119	15, 41, 83	33, 66	J7, F3			G	Ground: 0 V reference for internal logic.
V_{SSA}	22	J2	F3	15	11	9	E2			G	Analog ground: 0 V power supply and reference for the ADC and DAC. This should be the same voltage as V_{SS}, but should be isolated to minimize noise and error.
XTAL1	44	M4	L2	31	22	19	J1	[14] [16]		I	Input to the oscillator circuit and internal clock generator circuits.
XTAL2	46	N4	K4	33	23	20	K1	[14] [16]		O	Output from the oscillator amplifier.
DNC	-	-	-	-	-	12	-				Do not connect.

[1] PU = internal pull-up enabled (for $V_{DD(REG)(3V3)}$ = 3.3 V, pulled up to 3.3 V); IA = inactive, no pull-up/down enabled; F = floating; floating pins, if not used, should be tied to ground or power to minimize power consumption.

[2] I = Input; O = Output; G = Ground; S = Supply.

[3] 5 V tolerant pad providing digital I/O functions with TTL levels and hysteresis.

[4] 5 V tolerant standard pad (5 V tolerant if $V_{DD(3V3)}$ present; if $V_{DD(3V3)}$ not present, do not exceed 3.6 V) providing digital I/O functions with TTL levels and hysteresis. This pad can be powered by VBAT.

[5] 5 V tolerant pad providing digital I/O functions with TTL levels and hysteresis and analog input. When configured as a ADC input, digital section of the pad is disabled.

[6] 5 V tolerant fast pad (5 V tolerant if $V_{DD(3V3)}$ present; if $V_{DD(3V3)}$ not present, do not exceed 3.6 V) providing digital I/O functions with TTL levels and hysteresis.

[7] 5 V tolerant pad providing digital I/O with TTL levels and hysteresis and analog output function. When configured as the DAC output, digital section of the pad is disabled.

[8] Open-drain 5 V tolerant digital I/O pad, compatible with I^2C-bus 400 kHz specification. It requires an external pull-up to provide output functionality. When power is switched off, this pin connected to the I^2C-bus is floating and does not disturb the I^2C lines. Open-drain configuration applies to all functions on this pin.

All information provided in this document is subject to legal disclaimers.

© NXP Semiconductors N.V. 2017. All rights reserved.

[9] Not 5 V tolerant. Pad provides digital I/O and USB functions. It is designed in accordance with the *USB specification, revision 2.0* (Full-speed and Low-speed mode only).

[10] 5 V tolerant pad with 5 ns glitch filter providing digital I/O functions with TTL levels and hysteresis.

[11] Open-drain 5 V tolerant digital I/O pad, compatible with I^2C-bus 1 MHz specification. It requires an external pull-up to provide output functionality. When power is switched off, this pin connected to the I^2C-bus is floating and does not disturb the I^2C lines. Open-drain configuration applies to all functions on this pin.

[12] 5 V tolerant pad with 20 ns glitch filter providing digital I/O function with TTL levels and hysteresis.

[13] This pad can be powered from VBAT.

[14] Pad provides special analog functionality. A 32 kHz crystal oscillator must be used with the RTC. An external clock (32 kHz) can't be used to drive the RTCX1 pin.

[15] If the RTC is not used, these pins can be left floating.

[16] When the main oscillator is not used, connect XTAL1 and XTAL2 as follows: XTAL1 can be left floating or can be grounded (grounding is preferred to reduce susceptibility to noise). XTAL2 should be left floating.

7. Functional description

7.1 Architectural overview

The ARM Cortex-M4 includes three AHB-Lite buses: the system bus, the I-code bus, and the D-code bus. The I-code and D-code core buses are faster than the system bus and are used similarly to Tightly Coupled Memory (TCM) interfaces: one bus dedicated for instruction fetch (I-code) and one bus for data access (D-code). The use of two core buses allows for simultaneous operations if concurrent operations target different devices.

The LPC408x/7x use a multi-layer AHB matrix to connect the ARM Cortex-M4 buses and other bus masters to peripherals in a flexible manner that optimizes performance by allowing peripherals that are on different slaves ports of the matrix to be accessed simultaneously by different bus masters.

7.2 ARM Cortex-M4 processor

The ARM Cortex-M4 processor is running at frequencies of up to 120 MHz. The processor executes the Thumb-2 instruction set for optimal performance and code size, including hardware division, single-cycle multiply, and bit-field manipulation. A Memory Protection Unit (MPU) supporting eight regions is included.

7.3 ARM Cortex-M4 Floating Point Unit (FPU)

Remark: The FPU is available on parts LP4088/78/76.

The FPU supports single-precision floating-point computation functionality in compliance with the ANSI/IEEE Standard 754-2008. The FPU provides add, subtract, multiply, divide, multiply and accumulate, and square root operations. It also performs a variety of conversions between fixed-point, floating-point, and integer data formats.

7.4 On-chip flash program memory

The LPC408x/7x contain up to 512 kB of on-chip flash program memory. A new two-port flash accelerator maximizes performance for use with the two fast AHB-Lite buses.

All information provided in this document is subject to legal disclaimers.

© NXP Semiconductors N.V. 2017. All rights reserved.

7.5 EEPROM

The LPC408x/7x contains up to 4032 byte of on-chip byte-erasable and byte-programmable EEPROM data memory.

7.6 On-chip SRAM

The LPC408x/7x contain a total of up to 96 kB on-chip SRAM data memory. This includes 64 kB main SRAM, accessible by the CPU and DMA controller on a higher-speed bus, and up to two additional 16 kB peripheral SRAM blocks situated on a separate slave port on the AHB multilayer matrix.

This architecture allows CPU and DMA accesses to be spread over three separate RAMs that can be accessed simultaneously.

7.7 Memory Protection Unit (MPU)

The LPC408x/7x have a Memory Protection Unit (MPU) which can be used to improve the reliability of an embedded system by protecting critical data within the user application.

The MPU allows separating processing tasks by disallowing access to each other's data, disabling access to memory regions, allowing memory regions to be defined as read-only and detecting unexpected memory accesses that could potentially break the system.

The MPU separates the memory into distinct regions and implements protection by preventing disallowed accesses. The MPU supports up to eight regions each of which can be divided into eight subregions. Accesses to memory locations that are not defined in the MPU regions, or not permitted by the region setting, will cause the Memory Management Fault exception to take place.

7.8 Memory map

Table 4. LPC408x/7x memory usage and details

Address range	General Use	Address range details and description	
0x0000 0000 to 0x1FFF FFFF	On-chip non-volatile memory	0x0000 0000 to 0x0007 FFFF	For devices with 512 kB of flash memory.
		0x0000 0000 to 0x0003 FFFF	For devices with 256 kB of flash memory.
		0x0000 0000 to 0x0001 FFFF	For devices with 128 kB of flash memory.
		0x0000 0000 to 0x0000 FFFF	For devices with 64 kB of flash memory.
	On-chip SRAM	0x1000 0000 to 0x1000 FFFF	For devices with 64 kB of main SRAM.
		0x1000 0000 to 0x1000 7FFF	For devices with 32 kB of main SRAM.
		0x1000 0000 to 0x1000 3FFF	For devices with 16 kB of main SRAM.
	Boot ROM	0x1FFF 0000 to 0x1FFF 1FFF	8 kB Boot ROM with flash services.
0x2000 0000 to 0x3FFF FFFF	On-chip SRAM (typically used for peripheral data)	0x2000 0000 to 0x2000 1FFF	Peripheral SRAM - bank 0 (first 8 kB)
		0x2000 2000 to 0x2000 3FFF	Peripheral SRAM - bank 0 (second 8 kB)
		0x2000 4000 to 0x2000 7FFF	Peripheral SRAM - bank 1 (16 kB)
	AHB peripherals	0x2008 0000 to 0x200B FFFF	See Figure 9 for details
0x4000 0000 to 0x7FFF FFFF	APB Peripherals	0x4000 0000 to 0x4007 FFFF	APB0 Peripherals, up to 32 peripheral blocks of 16 kB each.
		0x4008 0000 to 0x400F FFFF	APB1 Peripherals, up to 32 peripheral blocks of 16 kB each.

All information provided in this document is subject to legal disclaimers.

© NXP Semiconductors N.V. 2017. All rights reserved.

Table 4. LPC408x/7x memory usage and details

Address range	General Use	Address range details and description	
0x8000 0000 to 0xDFFF FFFF	Off-chip Memory via the External Memory Controller	Four static memory chip selects:	
		0x8000 0000 to 0x83FF FFFF	Static memory chip select 0 (up to 64 MB)
		0x9000 0000 to 0x93FF FFFF	Static memory chip select 1 (up to 64 MB)
		0x9800 0000 to 0x9BFF FFFF	Static memory chip select 2 (up to 64 MB)
		0x9C00 0000 to 0x9FFF FFFF	Static memory chip select 3 (up to 64 MB)
		Four dynamic memory chip selects:	
		0xA000 0000 to 0xAFFF FFFF	Dynamic memory chip select 0 (up to 256 MB)
		0xB000 0000 to 0xBFFF FFFF	Dynamic memory chip select 1 (up to 256 MB)
		0xC000 0000 to 0xCFFF FFFF	Dynamic memory chip select 2 (up to 256 MB)
		0xD000 0000 to 0xDFFF FFFF	Dynamic memory chip select 3 (up to 256 MB)
0xE000 0000 to 0xE00F FFFF	Cortex-M4 Private Peripheral Bus	0xE000 0000 to 0xE00F FFFF	Cortex-M4 related functions, includes the NVIC and System Tick Timer.

The LPC408x/7x incorporate several distinct memory regions, shown in the following figures. Figure 9 shows the overall map of the entire address space from the user program viewpoint following reset. The interrupt vector area supports address remapping.

The AHB peripheral area is 2 MB in size, and is divided to allow for up to 128 peripherals. The APB peripheral area is 1 MB in size and is divided to allow for up to 64 peripherals. Each peripheral of either type is allocated 16 kB of space. This allows simplifying the address decoding for each peripheral.

7.9 Nested Vectored Interrupt Controller (NVIC)

The NVIC is an integral part of the Cortex-M4. The tight coupling to the CPU allows for low interrupt latency and efficient processing of late arriving interrupts.

7.9.1 Features

- Controls system exceptions and peripheral interrupts.
- On the LPC408x/7x, the NVIC supports 40 vectored interrupts.
- 32 programmable interrupt priority levels, with hardware priority level masking.
- Relocatable vector table.
- Non-Maskable Interrupt (NMI).
- Software interrupt generation.

7.9.2 Interrupt sources

Each peripheral device has one interrupt line connected to the NVIC but may have several interrupt flags. Individual interrupt flags may also represent more than one interrupt source.

Any pin on port 0 and port 2 regardless of the selected function can be programmed to generate an interrupt on a rising edge, a falling edge, or both.

All information provided in this document is subject to legal disclaimers.

© NXP Semiconductors N.V. 2017. All rights reserved.

7.10 Pin connect block

The pin connect block allows selected pins of the microcontroller to have more than one function. Configuration registers control the multiplexers to allow connection between the pin and the on-chip peripherals.

Peripherals should be connected to the appropriate pins prior to being activated and prior to any related interrupts being enabled. Activity of any enabled peripheral function that is not mapped to a related pin should be considered undefined.

Most pins can also be configured as open-drain outputs or to have a pull-up, pull-down, or no resistor enabled.

7.11 External Memory Controller (EMC)

Remark: The EMC is available for parts LPC4088/78/76. Supported memory size and type and EMC bus width vary for different packages (see Table 2). The EMC pin configuration for each part is shown in Table 5.

Table 5. External memory controller pin configuration

Parts	Data bus pins	Address bus pins	Control pins	
			SRAM	**SDRAM**
LPC4088FBD208 LPC4088FET208 LPC4078FBD208 LPC4078FET208	EMC_D[31:0]	EMC_A[25:0]	$\overline{\text{EMC_BLS}}$[3:0], $\overline{\text{EMC_CS}}$[3:0], $\overline{\text{EMC_OE}}$, $\overline{\text{EMC_WE}}$	$\overline{\text{EMC_RAS}}$, $\overline{\text{EMC_CAS}}$, $\overline{\text{EMC_DYCS}}$[3:0], EMC_CLK[1:0], EMC_CKE[3:0], EMC_DQM[3:0]
LPC4088FET180 LPC4078FET180 LPC4076FET180	EMC_D[15:0]	EMC_A[19:0]	$\overline{\text{EMC_BLS}}$[1:0], $\overline{\text{EMC_CS}}$[1:0], $\overline{\text{EMC_OE}}$, $\overline{\text{EMC_WE}}$	$\overline{\text{EMC_RAS}}$, $\overline{\text{EMC_CAS}}$, $\overline{\text{EMC_DYCS}}$[1:0], EMC_CLK[1:0], EMC_CKE[1:0], EMC_DQM[1:0]
LPC4088FBD144 LPC4078FBD144 LPC4076FBD144	EMC_D[7:0]	EMC_A[15:0]	$\overline{\text{EMC_BLS}}$[3:2], $\overline{\text{EMC_CS}}$[1:0], $\overline{\text{EMC_OE}}$, $\overline{\text{EMC_WE}}$	not available

The LPC408x/7x EMC is an ARM PrimeCell MultiPort Memory Controller peripheral offering support for asynchronous static memory devices such as RAM, ROM, and flash. In addition, it can be used as an interface with off-chip memory-mapped devices and peripherals. The EMC is an Advanced Microcontroller Bus Architecture (AMBA) compliant peripheral.

All information provided in this document is subject to legal disclaimers.

© NXP Semiconductors N.V. 2017. All rights reserved.

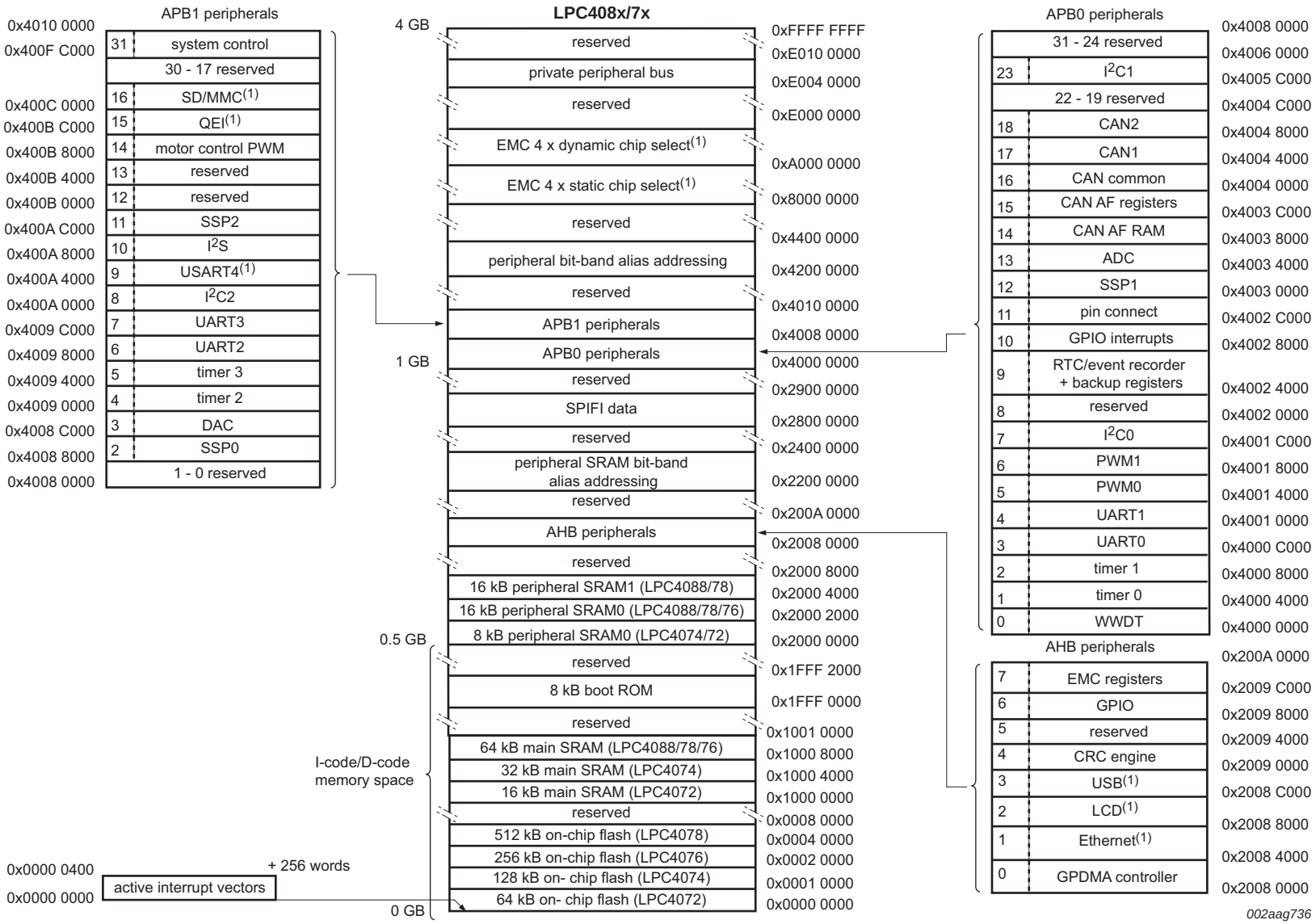

(1) Not available on all parts. See Table 2 and Table 4.

Fig 9. LPC408x/7x memory map

All information provided in this document is subject to legal disclaimers.

© NXP Semiconductors N.V. 2017. All rights reserved.

7.11.1 Features

- Dynamic memory interface support including single data rate SDRAM.
- Asynchronous static memory device support including RAM, ROM, and flash, with or without asynchronous page mode.
- Low transaction latency.
- Read and write buffers to reduce latency and to improve performance.
- 8/16/32 data and 16/20/26 address lines wide static memory support.
- 16 bit and 32 bit wide chip select SDRAM memory support.
- Static memory features include:
  - Asynchronous page mode read.
  - Programmable Wait States.
  - Bus turnaround delay.
  - Output enable and write enable delays.
  - Extended wait.
- Four chip selects for synchronous memory and four chip selects for static memory devices.
- Power-saving modes dynamically control EMC_CKE and EMC_CLK outputs to SDRAMs.
- Dynamic memory self-refresh mode controlled by software.
- Controller supports 2048 (A0 to A10), 4096 (A0 to A11), and 8192 (A0 to A12) row address synchronous memory parts. That is typical 512 MB, 256 MB, and 128 MB parts, with 4, 8, 16, or 32 data bits per device.
- Separate reset domains allow the for auto-refresh through a chip reset if desired.

Note: Synchronous static memory devices (synchronous burst mode) are not supported.

7.12 General purpose DMA controller

The GPDMA is an AMBA AHB compliant peripheral allowing selected peripherals to have DMA support.

The GPDMA enables peripheral-to-memory, memory-to-peripheral, peripheral-to-peripheral, and memory-to-memory transactions. The source and destination areas can each be either a memory region or a peripheral and can be accessed through the AHB master. The GPDMA controller allows data transfers between the various on-chip SRAM areas and supports the SD/MMC card interface, all SSPs, the I^2S, all UARTs, the A/D Converter, and the D/A Converter peripherals. DMA can also be triggered by selected timer match conditions. Memory-to-memory transfers and transfers to or from GPIO are supported.

7.12.1 Features

- Eight DMA channels. Each channel can support an unidirectional transfer.
- 16 DMA request lines.

All information provided in this document is subject to legal disclaimers.

© NXP Semiconductors N.V. 2017. All rights reserved.

- Single DMA and burst DMA request signals. Each peripheral connected to the DMA Controller can assert either a burst DMA request or a single DMA request. The DMA burst size is set by programming the DMA Controller.
- Memory-to-memory, memory-to-peripheral, peripheral-to-memory, and peripheral-to-peripheral transfers are supported.
- Scatter or gather DMA is supported through the use of linked lists. This means that the source and destination areas do not have to occupy contiguous areas of memory.
- Hardware DMA channel priority.
- AHB slave DMA programming interface. The DMA Controller is programmed by writing to the DMA control registers over the AHB slave interface.
- One AHB bus master for transferring data. The interface transfers data when a DMA request goes active.
- 32-bit AHB master bus width.
- Incrementing or non-incrementing addressing for source and destination.
- Programmable DMA burst size. The DMA burst size can be programmed to more efficiently transfer data.
- Internal four-word FIFO per channel.
- Supports 8, 16, and 32-bit wide transactions.
- Big-endian and little-endian support. The DMA Controller defaults to little-endian mode on reset.
- An interrupt to the processor can be generated on a DMA completion or when a DMA error has occurred.
- Raw interrupt status. The DMA error and DMA count raw interrupt status can be read prior to masking.

7.13 CRC engine

The Cyclic Redundancy Check (CRC) generator with programmable polynomial settings supports several CRC standards commonly used. To save system power and bus bandwidth, the CRC engine supports DMA transfers.

7.13.1 Features

- Supports three common polynomials CRC-CCITT, CRC-16, and CRC-32.
  - CRC-CCITT: $x^{16} + x^{12} + x^5 + 1$
  - CRC-16: $x^{16} + x^{15} + x^2 + 1$
  - CRC-32: $x^{32} + x^{26} + x^{23} + x^{22} + x^{16} + x^{12} + x^{11} + x^{10} + x^8 + x^7 + x^5 + x^4 + x^2 + x + 1$
- Bit order reverse and 1's complement programmable setting for input data and CRC sum.
- Programmable seed number setting.
- Supports CPU PIO or DMA back-to-back transfer.
- Accept any size of data width per write: 8, 16 or 32-bit.
  - 8-bit write: 1-cycle operation.
  - 16-bit write: 2-cycle operation (8-bit x 2-cycle).
  - 32-bit write: 4-cycle operation (8-bit x 4-cycle).

All information provided in this document is subject to legal disclaimers.

© NXP Semiconductors N.V. 2017. All rights reserved.

7.14 LCD controller

Remark: The LCD controller is available on parts LPC4088.

The LCD controller provides all of the necessary control signals to interface directly to a variety of color and monochrome LCD panels. Both STN (single and dual panel) and TFT panels can be operated. The display resolution is selectable and can be up to 1024 × 768 pixels. Several color modes are provided, up to a 24-bit true-color non-palettized mode. An on-chip 512-byte color palette allows reducing bus utilization (i.e. memory size of the displayed data) while still supporting a large number of colors.

The LCD interface includes its own DMA controller to allow it to operate independently of the CPU and other system functions. A built-in FIFO acts as a buffer for display data, providing flexibility for system timing. Hardware cursor support can further reduce the amount of CPU time needed to operate the display.

7.14.1 Features

- AHB master interface to access frame buffer.
- Setup and control via a separate AHB slave interface.
- Dual 16-deep programmable 64-bit wide FIFOs for buffering incoming display data.
- Supports single and dual-panel monochrome Super Twisted Nematic (STN) displays with 4-bit or 8-bit interfaces.
- Supports single and dual-panel color STN displays.
- Supports Thin Film Transistor (TFT) color displays.
- Programmable display resolution including, but not limited to: 320 × 200, 320 × 240, 640 × 200, 640 × 240, 640 × 480, 800 × 600, and 1024 × 768.
- Hardware cursor support for single-panel displays.
- 15 gray-level monochrome, 3375 color STN, and 32 K color palettized TFT support.
- 1, 2, or 4 bits-per-pixel (bpp) palettized displays for monochrome STN.
- 1, 2, 4, or 8 bpp palettized color displays for color STN and TFT.
- 16 bpp true-color non-palettized, for color STN and TFT.
- 24 bpp true-color non-palettized, for color TFT.
- Programmable timing for different display panels.
- 256 entry, 16-bit palette RAM, arranged as a 128 × 32-bit RAM.
- Frame, line, and pixel clock signals.
- AC bias signal for STN, data enable signal for TFT panels.
- Supports little and big-endian, and Windows CE data formats.
- LCD panel clock may be generated from the peripheral clock, or from a clock input pin.

7.15 Ethernet

Remark: The Ethernet block is available on parts LPC4088/78/76.

The Ethernet block contains a full featured 10 Mbit/s or 100 Mbit/s Ethernet MAC designed to provide optimized performance through the use of DMA hardware acceleration. Features include a generous suite of control registers, half or full duplex

All information provided in this document is subject to legal disclaimers.

© NXP Semiconductors N.V. 2017. All rights reserved.

operation, flow control, control frames, hardware acceleration for transmit retry, receive packet filtering and wake-up on LAN activity. Automatic frame transmission and reception with scatter-gather DMA off-loads many operations from the CPU.

The Ethernet block and the CPU share the ARM Cortex-M4 D-code and system bus through the AHB-multilayer matrix to access the various on-chip SRAM blocks for Ethernet data, control, and status information.

The Ethernet block interfaces between an off-chip Ethernet PHY using the Media Independent Interface (MII) or Reduced MII (RMII) protocol and the on-chip Media Independent Interface Management (MIIM) serial bus.

7.15.1 Features

- Ethernet standards support:
  - Supports 10 Mbit/s or 100 Mbit/s PHY devices including 10 Base-T, 100 Base-TX, 100 Base-FX, and 100 Base-T4.
  - Fully compliant with IEEE standard 802.3.
  - Fully compliant with 802.3x Full Duplex Flow Control and Half Duplex back pressure.
  - Flexible transmit and receive frame options.
  - Virtual Local Area Network (VLAN) frame support.
- Memory management:
  - Independent transmit and receive buffers memory mapped to shared SRAM.
  - DMA managers with scatter/gather DMA and arrays of frame descriptors.
  - Memory traffic optimized by buffering and pre-fetching.
- Enhanced Ethernet features:
  - Receive filtering.
  - Multicast and broadcast frame support for both transmit and receive.
  - Optional automatic Frame Check Sequence (FCS) insertion with Circular Redundancy Check (CRC) for transmit.
  - Selectable automatic transmit frame padding.
  - Over-length frame support for both transmit and receive allows any length frames.
  - Promiscuous receive mode.
  - Automatic collision back-off and frame retransmission.
  - Includes power management by clock switching.
  - Wake-on-LAN power management support allows system wake-up: using the receive filters or a magic frame detection filter.
- Physical interface:
  - Attachment of external PHY chip through standard MII or RMII interface.
  - PHY register access is available via the MIIM interface.

All information provided in this document is subject to legal disclaimers.

© NXP Semiconductors N.V. 2017. All rights reserved.

7.16 USB interface

Remark: The USB Device/Host/OTG controller is available on parts LPC4088/78/76. The USB Device-only controller is available on part LPC4074/72.

The Universal Serial Bus (USB) is a 4-wire bus that supports communication between a host and one or more (up to 127) peripherals. The host controller allocates the USB bandwidth to attached devices through a token-based protocol. The bus supports hot plugging and dynamic configuration of the devices. All transactions are initiated by the host controller.

See Section 13.1 for details on typical USB interfacing solutions.

7.16.1 USB device controller

The device controller enables 12 Mbit/s data exchange with a USB host controller. It consists of a register interface, serial interface engine, endpoint buffer memory, and a DMA controller. The serial interface engine decodes the USB data stream and writes data to the appropriate endpoint buffer. The status of a completed USB transfer or error condition is indicated via status registers. An interrupt is also generated if enabled. When enabled, the DMA controller transfers data between the endpoint buffer and the USB RAM.

7.16.1.1 Features

- Fully compliant with *USB 2.0 Specification* (full speed).
- Supports 32 physical (16 logical) endpoints with a 4 kB endpoint buffer RAM.
- Supports Control, Bulk, Interrupt and Isochronous endpoints.
- Scalable realization of endpoints at run time.
- Endpoint Maximum packet size selection (up to USB maximum specification) by software at run time.
- Supports SoftConnect and GoodLink features.
- While USB is in the Suspend mode, the LPC408x/7x can enter one of the reduced power modes and wake up on USB activity.
- Supports DMA transfers with all on-chip SRAM blocks on all non-control endpoints.
- Allows dynamic switching between CPU-controlled and DMA modes.
- Double buffer implementation for Bulk and Isochronous endpoints.

7.16.2 USB host controller

The host controller enables full- and low-speed data exchange with USB devices attached to the bus. It consists of register interface, serial interface engine and DMA controller. The register interface complies with the Open Host Controller Interface (OHCI) specification.

7.16.2.1 Features

- OHCI compliant.
- Two downstream ports.
- Supports per-port power switching.

All information provided in this document is subject to legal disclaimers.

© NXP Semiconductors N.V. 2017. All rights reserved.

7.16.3 USB OTG controller

USB OTG is a supplement to the *USB 2.0 Specification* that augments the capability of existing mobile devices and USB peripherals by adding host functionality for connection to USB peripherals.

The OTG Controller integrates the host controller, device controller, and a master-only I^2C interface to implement OTG dual-role device functionality. The dedicated I^2C interface controls an external OTG transceiver.

7.16.3.1 Features

- Fully compliant with On-The-Go supplement to the *USB 2.0 Specification, Revision 1.0a*.
- Hardware support for Host Negotiation Protocol (HNP).
- Includes a programmable timer required for HNP and Session Request Protocol (SRP).
- Supports any OTG transceiver compliant with the *OTG Transceiver Specification (CEA-2011), Rev. 1.0*.

7.17 SD/MMC card interface

Remark: The SD/MMC card interface is available on parts LPC4088/78/76.

The Secure Digital and Multimedia Card Interface (MCI) allows access to external SD memory cards. The SD card interface conforms to the *SD Multimedia Card Specification Version 2.11*.

7.17.1 Features

- The MCI provides all functions specific to the SD/MMC memory card. These include the clock generation unit, power management control, and command and data transfer.
- Conforms to *Multimedia Card Specification v2.11*.
- Conforms to *Secure Digital Memory Card Physical Layer Specification, v0.96.*
- Can be used as a multimedia card bus or a secure digital memory card bus host. The SD/MMC can be connected to several multimedia cards or a single secure digital memory card.
- DMA supported through the GPDMA controller.

7.18 Fast general purpose parallel I/O

Device pins that are not connected to a specific peripheral function are controlled by the GPIO registers. Pins may be dynamically configured as inputs or outputs. Separate registers allow setting or clearing any number of outputs simultaneously. The value of the output register may be read back as well as the current state of the port pins.

LPC408x/7x use accelerated GPIO functions:

- GPIO registers are accessed through the AHB multilayer bus so that the fastest possible I/O timing can be achieved.

All information provided in this document is subject to legal disclaimers.

© NXP Semiconductors N.V. 2017. All rights reserved.

- Mask registers allow treating sets of port bits as a group, leaving other bits unchanged.
- All GPIO registers are byte and half-word addressable.
- Entire port value can be written in one instruction.
- Support for Cortex-M4 bit banding.
- Support for use with the GPDMA controller.

Additionally, any pin on Port 0 and Port 2 providing a digital function can be programmed to generate an interrupt on a rising edge, a falling edge, or both. The edge detection is asynchronous, so it may operate when clocks are not present such as during Power-down mode. Each enabled interrupt can be used to wake up the chip from Power-down mode.

7.18.1 Features

- Bit level set and clear registers allow a single instruction to set or clear any number of bits in one port.
- Direction control of individual bits.
- All I/O default to inputs after reset.
- Pull-up/pull-down resistor configuration and open-drain configuration can be programmed through the pin connect block for each GPIO pin.

7.19 12-bit ADC

The LPC408x/7x contain one ADC. It is a single 12-bit successive approximation ADC with eight channels and DMA support.

7.19.1 Features

- 12-bit successive approximation ADC.
- Input multiplexing among eight pins.
- Power-down mode.
- Measurement range V_{SS} to VREFP.
- 12-bit conversion rate: up to 400 kHz.
- Individual channels can be selected for conversion.
- Burst conversion mode for single or multiple inputs.
- Optional conversion on transition of input pin or Timer Match signal.
- Individual result registers for each ADC channel to reduce interrupt overhead.
- DMA support.

7.20 10-bit DAC

The LPC408x/7x contain one DAC. The DAC allows to generate a variable analog output. The maximum output value of the DAC is VREFP.

7.20.1 Features

- 10-bit DAC.
- Resistor string architecture.

All information provided in this document is subject to legal disclaimers.

© NXP Semiconductors N.V. 2017. All rights reserved.

- Buffered output.
- Power-down mode.
- Selectable output drive.
- Dedicated conversion timer.
- DMA support.

7.21 Comparator

Remark: The comparator is available on parts LPC4088/7876.

Two embedded comparators are available to compare the voltage levels on external pins or against internal voltages. Up to four voltages on external pins and several internal reference voltages are selectable on each comparator. Additionally, two of the external inputs can be selected to drive an input common on both comparators.

7.21.1 Features

- Up to five selectable external sources per comparator; fully configurable on either positive or negative comparator input channels.
- 0.9 V internal band gap reference voltage selectable as either positive or negative input on each comparator.
- 32-stage voltage ladder internal reference for selectable voltages on each comparator; configurable on either positive or negative comparator input.
- Voltage ladder source voltage is selectable from an external pin or the 3.3 V analog voltage supply.
- Voltage ladder can be separately powered down for applications only requiring the comparator function.
- Relaxation oscillator circuitry output, for a 555 style timer operation.
- Individual comparator outputs can be connected to I/O pins.
- Separate interrupt for each comparator.
- Edge and level comparator outputs connect to two timers allowing edge counting while a level match has been asserted or measuring the time between two voltage trip points.

7.22 UART0/1/2/3 and USART4

Remark: UART0/1/2/3 are available on all parts. USART4 is available on parts LPC4088/78/76.

The LPC408x/7x contain five UARTs. In addition to standard transmit and receive data lines, UART1 also provides a full modem control handshake interface and support for RS-485/9-bit mode allowing both software address detection and automatic address detection using 9-bit mode.

The UARTs include a fractional baud rate generator. Standard baud rates such as 115200 Bd can be achieved with any crystal frequency above 2 MHz.

7.22.1 Features

- Maximum UART data bit rate of 7.5 MBit/s.

All information provided in this document is subject to legal disclaimers.

© NXP Semiconductors N.V. 2017. All rights reserved.

- 16 B Receive and Transmit FIFOs.
- Register locations conform to 16C550 industry standard.
- Receiver FIFO trigger points at 1 B, 4 B, 8 B, and 14 B.
- Built-in fractional baud rate generator covering wide range of baud rates without a need for external crystals of particular values.
- Auto-baud capability.
- Fractional divider for baud rate control, auto baud capabilities and FIFO control mechanism that enables software flow control implementation.
- Support for RS-485/9-bit/EIA-485 mode and multiprocessor addressing.
- All UARTs have DMA support for both transmit and receive.
- UART1 equipped with standard modem interface signals. This module also provides full support for hardware flow control (auto-CTS/RTS).
- USART4 includes an IrDA mode to support infrared communication.
- USART4 supports synchronous mode and a smart card mode conforming to ISO7816-3.

7.23 SPIFI

The SPI Flash Interface allows low-cost serial flash memories to be connected to the ARM Cortex-M4 processor with little performance penalty compared to parallel flash devices with higher pin count.

The entire flash content is accessible as normal memory using byte, halfword, and word accesses by the processor and/or DMA channels.

SPIFI provides sufficient flexibility to be compatible with common flash devices and includes extensions to help insure compatibility with future devices.

7.23.1 Features

- Quad SPI Flash Interface (SPIFI) interface to external flash.
- Transfer rates of up to SPIFI_CLK/2 bytes per second.
- Code in the serial flash memory can be executed as if it was in the CPU's internal memory space. This is accomplished by mapping the external flash memory directly into the CPU memory space.
- Supports 1-, 2-, and 4-bit bidirectional serial protocols.
- Half-duplex protocol compatible with various vendors and devices.
- Supported by a driver library available from NXP Semiconductors.

7.24 SSP serial I/O controller

The LPC408x/7x contain three SSP controllers. The SSP controller is capable of operation on a SPI, 4-wire SSI, or Microwire bus. It can interact with multiple masters and slaves on the bus. Only a single master and a single slave can communicate on the bus during a given data transfer. The SSP supports full duplex transfers, with frames of 4 bits to 16 bits of data flowing from the master to the slave and from the slave to the master. In practice, often only one of these data flows carries meaningful data.

All information provided in this document is subject to legal disclaimers.

© NXP Semiconductors N.V. 2017. All rights reserved.

7.24.1 Features

- Maximum SSP speed of 33 Mbit/s (master) or 10 Mbit/s (slave).
- Compatible with Motorola SPI, 4-wire Texas Instruments SSI, and National Semiconductor Microwire buses.
- Synchronous serial communication.
- Master or slave operation.
- 8-frame FIFOs for both transmit and receive.
- 4-bit to 16-bit frame.
- DMA transfers supported by GPDMA.

7.25 I^2C-bus serial I/O controllers

The LPC408x/7x contain three I^2C-bus controllers.

The I^2C-bus is bidirectional for inter-IC control using only two wires: a Serial Clock Line (SCL) and a Serial Data Line (SDA). Each device is recognized by a unique address and can operate as either a receiver-only device (e.g., an LCD driver) or a transmitter with the capability to both receive and send information (such as memory). Transmitters and/or receivers can operate in either master or slave mode, depending on whether the chip has to initiate a data transfer or is only addressed. The I^2C is a multi-master bus and can be controlled by more than one bus master connected to it.

7.25.1 Features

- All I^2C-bus controllers can use standard GPIO pins with bit rates of up to 400 kbit/s (Fast I^2C-bus). The I^2C0-bus interface uses special open-drain pins with bit rates of up to 400 kbit/s.
- The I^2C-bus interface supports Fast-mode Plus with bit rates up to 1 Mbit/s for I2C0 using pins P5[2] and P5[3].
- Easy to configure as master, slave, or master/slave.
- Programmable clocks allow versatile rate control.
- Bidirectional data transfer between masters and slaves.
- Multi-master bus (no central master).
- Arbitration between simultaneously transmitting masters without corruption of serial data on the bus.
- Serial clock synchronization allows devices with different bit rates to communicate via one serial bus.
- Serial clock synchronization can be used as a handshake mechanism to suspend and resume serial transfer.
- The I^2C-bus can be used for test and diagnostic purposes.
- Both I^2C-bus controllers support multiple address recognition and a bus monitor mode.

7.26 I^2S-bus serial I/O controllers

The LPC408x/7x contain one I^2S-bus interface. The I^2S-bus provides a standard communication interface for digital audio applications.

All information provided in this document is subject to legal disclaimers.

© NXP Semiconductors N.V. 2017. All rights reserved.

The I^2S-bus specification defines a 3-wire serial bus using one data line, one clock line, and one word select signal. The basic I^2S connection has one master, which is always the master, and one slave. The I^2S interface on the LPC408x/7x provides a separate transmit and receive channel, each of which can operate as either a master or a slave.

7.26.1 Features

- The interface has separate input/output channels each of which can operate in master or slave mode.
- Capable of handling 8-bit, 16-bit, and 32-bit word sizes.
- Mono and stereo audio data supported.
- The sampling frequency can range from 16 kHz to 48 kHz (16, 22.05, 32, 44.1, 48) kHz.
- Configurable word select period in master mode (separately for I^2S input and output).
- Two 8 word FIFO data buffers are provided, one for transmit and one for receive.
- Generates interrupt requests when buffer levels cross a programmable boundary.
- Two DMA requests, controlled by programmable buffer levels. These are connected to the GPDMA block.
- Controls include reset, stop and mute options separately for I^2S input and I^2S output.

7.27 CAN controller and acceptance filters

The LPC408x/7x contain one CAN controller with two channels.

The Controller Area Network (CAN) is a serial communications protocol which efficiently supports distributed real-time control with a very high level of security. Its domain of application ranges from high-speed networks to low cost multiplex wiring.

The CAN block is intended to support multiple CAN buses simultaneously, allowing the device to be used as a gateway, switch, or router between two of CAN buses in industrial or automotive applications.

Each CAN controller has a register structure similar to the NXP SJA1000 and the PeliCAN Library block, but the 8-bit registers of those devices have been combined in 32-bit words to allow simultaneous access in the ARM environment. The main operational difference is that the recognition of received Identifiers, known in CAN terminology as Acceptance Filtering, has been removed from the CAN controllers and centralized in a global Acceptance Filter.

7.27.1 Features

- Dual-channel CAN controller and bus.
- Data rates to 1 Mbit/s on each bus.
- 32-bit register and RAM access.
- Compatible with *CAN specification 2.0B, ISO 11898-1*.
- Global Acceptance Filter recognizes 11-bit and 29-bit receive identifiers for all CAN buses.
- Acceptance Filter can provide FullCAN-style automatic reception for selected Standard Identifiers.

All information provided in this document is subject to legal disclaimers.

© NXP Semiconductors N.V. 2017. All rights reserved.

- FullCAN messages can generate interrupts.

7.28 General purpose 32-bit timers/external event counters

The LPC408x/7x include four 32-bit timer/counters.

The timer/counter is designed to count cycles of the system derived clock or an externally-supplied clock. It can optionally generate interrupts, generate timed DMA requests, or perform other actions at specified timer values, based on four match registers. Each timer/counter also includes two capture inputs to trap the timer value when an input signal transitions, optionally generating an interrupt.

7.28.1 Features

- A 32-bit timer/counter with a programmable 32-bit prescaler.
- Counter or timer operation.
- Two 32-bit capture channels per timer, that can take a snapshot of the timer value when an input signal transitions. A capture event may also generate an interrupt.
- Four 32-bit match registers that allow:
  - Continuous operation with optional interrupt generation on match.
  - Stop timer on match with optional interrupt generation.
  - Reset timer on match with optional interrupt generation.
- Up to four external outputs corresponding to match registers, with the following capabilities:
  - Set LOW on match.
  - Set HIGH on match.
  - Toggle on match.
  - Do nothing on match.
- Up to two match registers can be used to generate timed DMA requests.

7.29 Pulse Width Modulator (PWM)

The LPC408x/7x contain two standard PWMs.

The PWM is based on the standard Timer block and inherits all of its features, although only the PWM function is pinned out on the LPC408x/7x. The Timer is designed to count cycles of the system derived clock and optionally switch pins, generate interrupts or perform other actions when specified timer values occur, based on seven match registers. The PWM function is in addition to these features, and is based on match register events.

The ability to separately control rising and falling edge locations allows the PWM to be used for more applications. For instance, multi-phase motor control typically requires three non-overlapping PWM outputs with individual control of all three pulse widths and positions.

Two match registers can be used to provide a single edge controlled PWM output. One match register (PWMMR0) controls the PWM cycle rate, by resetting the count upon match. The other match register controls the PWM edge position. Additional single edge

All information provided in this document is subject to legal disclaimers.

© NXP Semiconductors N.V. 2017. All rights reserved.

controlled PWM outputs require only one match register each, since the repetition rate is the same for all PWM outputs. Multiple single edge controlled PWM outputs will all have a rising edge at the beginning of each PWM cycle, when an PWMMR0 match occurs.

Three match registers can be used to provide a PWM output with both edges controlled. Again, the PWMMR0 match register controls the PWM cycle rate. The other match registers control the two PWM edge positions. Additional double edge controlled PWM outputs require only two match registers each, since the repetition rate is the same for all PWM outputs.

With double edge controlled PWM outputs, specific match registers control the rising and falling edge of the output. This allows both positive going PWM pulses (when the rising edge occurs prior to the falling edge), and negative going PWM pulses (when the falling edge occurs prior to the rising edge).

7.29.1 Features

- LPC408x/7x has two PWM blocks with Counter or Timer operation (may use the peripheral clock or one of the capture inputs as the clock source).
- Seven match registers allow up to 6 single edge controlled or 3 double edge controlled PWM outputs, or a mix of both types. The match registers also allow:
  - Continuous operation with optional interrupt generation on match.
  - Stop timer on match with optional interrupt generation.
  - Reset timer on match with optional interrupt generation.
- Supports single edge controlled and/or double edge controlled PWM outputs. Single edge controlled PWM outputs all go high at the beginning of each cycle unless the output is a constant low. Double edge controlled PWM outputs can have either edge occur at any position within a cycle. This allows for both positive going and negative going pulses.
- Pulse period and width can be any number of timer counts. This allows complete flexibility in the trade-off between resolution and repetition rate. All PWM outputs will occur at the same repetition rate.
- Double edge controlled PWM outputs can be programmed to be either positive going or negative going pulses.
- Match register updates are synchronized with pulse outputs to prevent generation of erroneous pulses. Software must ‘release’ new match values before they can become effective.
- May be used as a standard 32-bit timer/counter with a programmable 32-bit prescaler if the PWM mode is not enabled.

7.30 Motor control PWM

The LPC408x/7x contain one motor control PWM.

The motor control PWM is a specialized PWM supporting 3-phase motors and other combinations. Feedback inputs are provided to automatically sense rotor position and use that information to ramp speed up or down. An abort input is also provided that causes the PWM to immediately release all motor drive outputs. At the same time, the motor control PWM is highly configurable for other generalized timing, counting, capture, and compare applications.

All information provided in this document is subject to legal disclaimers.

© NXP Semiconductors N.V. 2017. All rights reserved.

The maximum PWM speed is determined by the PWM resolution (n) and the operating frequency f: PWM speed = $f/2^n$ (see Table 6).

Table 6. PWM speed at operating frequency 120 MHz

PWM resolution	PWM speed
6 bit	1.875 MHz
8 bit	0.468 MHz
10 bit	0.117 MHz

7.31 Quadrature Encoder Interface (QEI)

Remark: The QEI is available on parts LPC4088/78/76.

A quadrature encoder, also known as a 2-channel incremental encoder, converts angular displacement into two pulse signals. By monitoring both the number of pulses and the relative phase of the two signals, the user can track the position, direction of rotation, and velocity. In addition, a third channel, or index signal, can be used to reset the position counter. The quadrature encoder interface decodes the digital pulses from a quadrature encoder wheel to integrate position over time and determine direction of rotation. In addition, the QEI can capture the velocity of the encoder wheel.

7.31.1 Features

- Tracks encoder position.
- Increments/decrements depending on direction.
- Programmable for 2× or 4× position counting.
- Velocity capture using built-in timer.
- Velocity compare function with “less than” interrupt.
- Uses 32-bit registers for position and velocity.
- Three position compare registers with interrupts.
- Index counter for revolution counting.
- Index compare register with interrupts.
- Can combine index and position interrupts to produce an interrupt for whole and partial revolution displacement.
- Digital filter with programmable delays for encoder input signals.
- Can accept decoded signal inputs (clk and direction).
- Connected to APB.

7.32 ARM Cortex-M4 system tick timer

The ARM Cortex-M4 includes a system tick timer (SYSTICK) that is intended to generate a dedicated SYSTICK exception at a 10 ms interval. In the LPC408x/7x, this timer can be clocked from the internal AHB clock or from a device pin.

7.33 Windowed WatchDog Timer (WWDT)

The purpose of the watchdog is to reset the controller if software fails to periodically service it within a programmable time window.

All information provided in this document is subject to legal disclaimers.

© NXP Semiconductors N.V. 2017. All rights reserved.

7.33.1 Features

- Internally resets chip if not periodically reloaded during the programmable time-out period.
- Optional windowed operation requires reload to occur between a minimum and maximum time period, both programmable.
- Optional warning interrupt can be generated at a programmable time prior to watchdog time-out.
- Enabled by software but requires a hardware reset or a watchdog reset/interrupt to be disabled.
- Incorrect feed sequence causes reset or interrupt if enabled.
- Flag to indicate watchdog reset.
- Programmable 24-bit timer with internal prescaler.
- Selectable time period from ($T_{cy(WDCLK)} \times 256 \times 4$) to ($T_{cy(WDCLK)} \times 2^{24} \times 4$) in multiples of $T_{cy(WDCLK)} \times 4$.
- The Watchdog Clock (WDCLK) source is a dedicated watchdog oscillator, which is always running if the watchdog timer is enabled.

7.34 RTC and backup registers

The RTC is a set of counters for measuring time when system power is on, and optionally when it is off. The RTC on the LPC408x/7x is designed to have extremely low power consumption, i.e. less than 1 μA. The RTC will typically run from the main chip power supply conserving battery power while the rest of the device is powered up. When operating from a battery, the RTC will continue working down to 2.1 V. Battery power can be provided from a standard 3 V lithium button cell.

An ultra-low power 32 kHz oscillator will provide a 1 Hz clock to the time counting portion of the RTC, moving most of the power consumption out of the time counting function.

The RTC includes a calibration mechanism to allow fine-tuning the count rate in a way that will provide less than 1 second per day error when operated at a constant voltage and temperature.

The RTC contains a small set of backup registers (20 bytes) for holding data while the main part of the LPC408x/7x is powered off.

The RTC includes an alarm function that can wake up the LPC408x/7x from all reduced power modes with a time resolution of 1 s.

7.34.1 Features

- Measures the passage of time to maintain a calendar and clock.
- Ultra low power design to support battery powered systems.
- Provides Seconds, Minutes, Hours, Day of Month, Month, Year, Day of Week, and Day of Year.
- Dedicated power supply pin can be connected to a battery or to the main 3.3 V.
- Periodic interrupts can be generated from increments of any field of the time registers.
- Backup registers (20 bytes) powered by VBAT.

All information provided in this document is subject to legal disclaimers.

© NXP Semiconductors N.V. 2017. All rights reserved.

- RTC power supply is isolated from the rest of the chip.

7.35 Event monitor/recorder

The event monitor/recorder allows recording of tampering events in sealed product enclosures. Sensors report any attempt to open the enclosure, or to tamper with the device in any other way. The event monitor/recorder stores records of such events when the device is powered only by the backup battery.

7.35.1 Features

- Supports three digital event inputs in the VBAT power domain.
- An event is defined as a level change at the digital event inputs.
- For each event channel, two timestamps mark the first and the last occurrence of an event. Each channel also has a dedicated counter tracking the total number of events. Timestamp values are taken from the RTC.
- Runs in VBAT power domain, independent of system power supply. The event/recorder/monitor can therefore operate in Deep power-down mode.
- Very low power consumption.
- Interrupt available if system is running.
- A qualified event can be used as a wake-up trigger.
- State of event interrupts accessible by software through GPIO.

7.36 Clocking and power control

7.36.1 Crystal oscillators

The LPC408x/7x include four independent oscillators. These are the main oscillator, the IRC oscillator, the watchdog oscillator, and the RTC oscillator.

Following reset, the LPC408x/7x will operate from the Internal RC oscillator until switched by software. This allows systems to operate without any external crystal and the boot loader code to operate at a known frequency.

See Figure 10 for an overview of the LPC408x/7x clock generation.

All information provided in this document is subject to legal disclaimers.

© NXP Semiconductors N.V. 2017. All rights reserved.

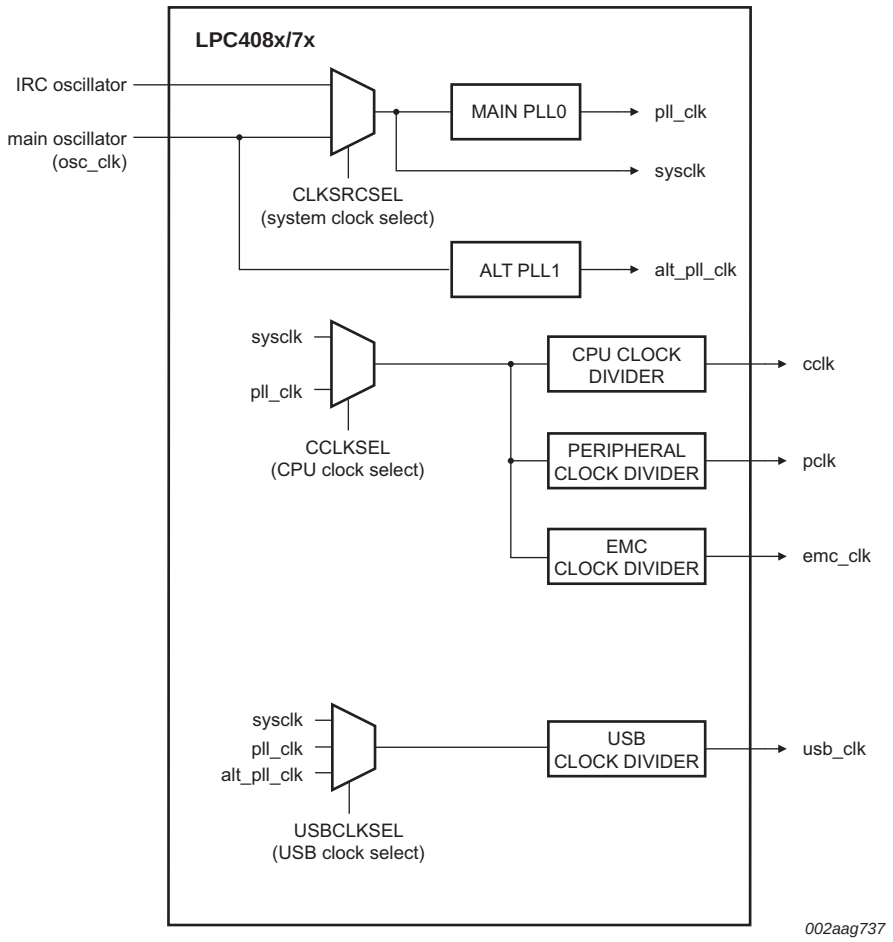

Fig 10. LPC408x/7x clock generation block diagram

7.36.1.1 Internal RC oscillator

The IRC may be used as the clock that drives the PLL and subsequently the CPU. The nominal IRC frequency is 12 MHz. The IRC is trimmed to 1 % accuracy over the entire voltage and temperature range.

Upon power-up or any chip reset, the LPC408x/7x use the IRC as the clock source. Software may later switch to one of the other available clock sources.

7.36.1.2 Main oscillator

The main oscillator can be used as the clock source for the CPU, with or without using the PLL. The main oscillator also provides the clock source for the alternate PLL1.

The main oscillator operates at frequencies of 1 MHz to 25 MHz. This frequency can be boosted to a higher frequency, up to the maximum CPU operating frequency, by the main PLL. The clock selected as the PLL input is PLLCLKIN. The ARM processor clock frequency is referred to as CCLK elsewhere in this document. The frequencies of PLLCLKIN and CCLK are the same value unless the PLL is active and connected. The clock frequency for each peripheral can be selected individually and is referred to as PCLK. Refer to Section 7.36.2 for additional information.

All information provided in this document is subject to legal disclaimers.

© NXP Semiconductors N.V. 2017. All rights reserved.

7.36.1.3 RTC oscillator

The RTC oscillator provides a 1 Hz clock to the RTC and a 32 kHz clock output that can be output on the CLKOUT pin in order to allow trimming the RTC oscillator without interference from a probe.

7.36.1.4 Watchdog oscillator

The Watchdog Timer has a dedicated oscillator that provides a 500 kHz clock to the Watchdog Timer that is always running if the Watchdog Timer is enabled. The Watchdog oscillator clock can be output on the CLKOUT pin in order to allow observe its frequency.

In order to allow Watchdog Timer operation with minimum power consumption, which can be important in reduced power modes, the Watchdog oscillator frequency is not tightly controlled. The Watchdog oscillator frequency will vary over temperature and power supply within a particular part, and may vary by processing across different parts. This variation should be taken into account when determining Watchdog reload values.

Within a particular part, temperature and power supply variations can produce up to a ±17 % frequency variation. Frequency variation between devices under the same operating conditions can be up to ±30 %.

7.36.2 Main PLL (PLL0) and Alternate PLL (PLL1)

PLL0 (also called the Main PLL) and PLL1 (also called the Alternate PLL) are functionally identical but have somewhat different input possibilities and output connections. These possibilities are shown in Figure 10. The Main PLL can receive its input from either the IRC or the main oscillator and can potentially be used to provide the clocks to nearly everything on the device. The Alternate PLL receives its input only from the main oscillator and is intended to be used as an alternate source of clocking to the USB. The USB has timing needs that may not always be filled by the Main PLL.

Both PLLs are disabled and powered off on reset. If the Alternate PLL is left disabled, the USB clock can be supplied by PLL0 if everything is set up to provide 48 MHz to the USB clock through that route. The source for each clock must be selected via the CLKSEL registers and can be further reduced by clock dividers as needed.

PLL0 accepts an input clock frequency from either the IRC or the main oscillator. If only the Main PLL is used, then its output frequency must be an integer multiple of all other clocks needed in the system. PLL1 takes its input only from the main oscillator, requiring an external crystal in the range of 10 to 25 MHz. In each PLL, the Current Controlled Oscillator (CCO) operates in the range of 156 MHz to 320 MHz, so there are additional dividers to bring the output down to the desired frequencies. The minimum output divider value is 2, insuring that the output of the PLLs have a 50 % duty cycle.

If the USB is used, the possibilities for the CPU clock and other clocks will be limited by the requirements that the frequency be precise and very low jitter, and that the PLL0 output must be a multiple of 48 MHz. Even multiples of 48 MHz that are within the operating range of the PLL are 192 MHz and 288 MHz. Also, only the main oscillator in conjunction with the PLL can meet the precision and jitter specifications for USB. It is due to these limitations that the Alternate PLL is provided.

The alternate PLL accepts an input clock frequency from the main oscillator in the range of 10 MHz to 25 MHz only. When used as the USB clock, the input frequency is multiplied up to a multiple of 48 MHz (192 MHz or 288 MHz as described above).

All information provided in this document is subject to legal disclaimers.

© NXP Semiconductors N.V. 2017. All rights reserved.

7.36.3 Wake-up timer

The LPC408x/7x begin operation at power-up and when awakened from Power-down mode by using the 12 MHz IRC oscillator as the clock source. This allows chip operation to resume quickly. If the main oscillator or the PLL is needed by the application, software will need to enable these features and wait for them to stabilize before they are used as a clock source.

When the main oscillator is initially activated, the wake-up timer allows software to ensure that the main oscillator is fully functional before the processor uses it as a clock source and starts to execute instructions. This is important at power on, all types of reset, and whenever any of the aforementioned functions are turned off for any reason. Since the oscillator and other functions are turned off during Power-down mode, any wake-up of the processor from Power-down mode makes use of the wake-up Timer.

The wake-up timer monitors the crystal oscillator to check whether it is safe to begin code execution. When power is applied to the chip, or when some event caused the chip to exit Power-down mode, some time is required for the oscillator to produce a signal of sufficient amplitude to drive the clock logic. The amount of time depends on many factors, including the rate of $V_{DD(3V3)}$ ramp (in the case of power on), the type of crystal and its electrical characteristics (if a quartz crystal is used), as well as any other external circuitry (e.g., capacitors), and the characteristics of the oscillator itself under the existing ambient conditions.

7.36.4 Power control

The LPC408x/7x support a variety of power control features. There are four special modes of processor power reduction: Sleep mode, Deep-sleep mode, Power-down mode, and Deep power-down mode. The CPU clock rate may also be controlled as needed by changing clock sources, reconfiguring PLL values, and/or altering the CPU clock divider value. This allows a trade-off of power versus processing speed based on application requirements. In addition, the peripheral power control allows shutting down the clocks to individual on-chip peripherals, allowing fine tuning of power consumption by eliminating all dynamic power use in any peripherals that are not required for the application. Each of the peripherals has its own clock divider which provides even better power control.

The integrated PMU (Power Management Unit) automatically adjusts internal regulators to minimize power consumption during Sleep, Deep-sleep, Power-down, and Deep power-down modes.

The LPC408x/7x also implement a separate power domain to allow turning off power to the bulk of the device while maintaining operation of the RTC and a small set of registers for storing data during any of the power-down modes.

7.36.4.1 Sleep mode

When Sleep mode is entered, the clock to the core is stopped. Resumption from the Sleep mode does not need any special sequence other than re-enabling the clock to the ARM core.

In Sleep mode, execution of instructions is suspended until either a Reset or interrupt occurs. Peripheral functions continue operation during Sleep mode and may generate interrupts to cause the processor to resume execution. Sleep mode eliminates dynamic power used by the processor itself, memory systems and related controllers, and internal buses.

All information provided in this document is subject to legal disclaimers.

© NXP Semiconductors N.V. 2017. All rights reserved.

The DMA controller can continue to work in Sleep mode and has access to the peripheral RAMs and all peripheral registers. The flash memory and the main SRAM are not available in Sleep mode, they are disabled in order to save power.

Wake-up from Sleep mode will occur whenever any enabled interrupt occurs.

7.36.4.2 Deep-sleep mode

In Deep-sleep mode, the oscillator is shut down and the chip receives no internal clocks. The processor state and registers, peripheral registers, and internal SRAM values are preserved throughout Deep-sleep mode and the logic levels of chip pins remain static. The output of the IRC is disabled but the IRC is not powered down to allow fast wake-up. The RTC oscillator is not stopped because the RTC interrupts may be used as the wake-up source. The PLL is automatically turned off and disconnected. The clock divider registers are automatically reset to zero.

The Deep-sleep mode can be terminated and normal operation resumed by either a Reset or certain specific interrupts that are able to function without clocks. Since all dynamic operation of the chip is suspended, Deep-sleep mode reduces chip power consumption to a very low value. Power to the flash memory is left on in Deep-sleep mode, allowing a very quick wake-up.

Wake-up from Deep-sleep mode can initiated by the NMI, External Interrupts $\overline{\text{EINT0}}$ through $\overline{\text{EINT3}}$, GPIO interrupts, the Ethernet Wake-on-LAN interrupt, Brownout Detect, an RTC Alarm interrupt, a USB input pin transition (USB activity interrupt), a CAN input pin transition, or a Watchdog Timer time-out, when the related interrupt is enabled. Wake-up will occur whenever any enabled interrupt occurs.

On wake-up from Deep-sleep mode, the code execution and peripherals activities will resume after four cycles expire if the IRC was used before entering Deep-sleep mode. If the main external oscillator was used, the code execution will resume when 4096 cycles expire. PLL and clock dividers need to be reconfigured accordingly.

7.36.4.3 Power-down mode

Power-down mode does everything that Deep-sleep mode does but also turns off the power to the IRC oscillator and the flash memory. This saves more power but requires waiting for resumption of flash operation before execution of code or data access in the flash memory can be accomplished.

When the chip enters Power-down mode, the IRC, the main oscillator, and all clocks are stopped. The RTC remains running if it has been enabled and RTC interrupts may be used to wake up the CPU. The flash is forced into Power-down mode. The PLLs are automatically turned off and the clock selection multiplexers are set to use the system clock sysclk (the reset state). The clock divider control registers are automatically reset to zero. If the Watchdog timer is running, it will continue running in Power-down mode.

On the wake-up of Power-down mode, if the IRC was used before entering Power-down mode, it will take IRC 60 μs to start-up. After this four IRC cycles will expire before the code execution can then be resumed if the code was running from SRAM. In the meantime, the flash wake-up timer then counts 12 MHz IRC clock cycles to make the 100 μs flash start-up time. When it times out, access to the flash will be allowed. Users need to reconfigure the PLL and clock dividers accordingly.

All information provided in this document is subject to legal disclaimers.

© NXP Semiconductors N.V. 2017. All rights reserved.

7.36.4.4 Deep power-down mode

The Deep power-down mode can only be entered from the RTC block. In Deep power-down mode, power is shut off to the entire chip with the exception of the RTC module and the $\overline{\text{RESET}}$ pin.

To optimize power conservation, the user has the additional option of turning off or retaining power to the 32 kHz oscillator. It is also possible to use external circuitry to turn off power to the on-chip regulator via the $V_{DD(REG)(3V3)}$ pins and/or the I/O power via the $V_{DD(3V3)}$ pins after entering Deep Power-down mode. Power must be restored before device operation can be restarted.

The LPC408x/7x can wake up from Deep power-down mode via the $\overline{\text{RESET}}$ pin or an alarm match event of the RTC.

7.36.4.5 Wake-up Interrupt Controller (WIC)

The WIC allows the CPU to automatically wake up from any enabled priority interrupt that can occur while the clocks are stopped in Deep-sleep, Power-down, and Deep power-down modes.

The WIC works in connection with the Nested Vectored Interrupt Controller (NVIC). When the CPU enters Deep-sleep, Power-down, or Deep power-down mode, the NVIC sends a mask of the current interrupt situation to the WIC. This mask includes all of the interrupts that are both enabled and of sufficient priority to be serviced immediately. With this information, the WIC simply notices when one of the interrupts has occurred and then it wakes up the CPU.

The WIC eliminates the need to periodically wake up the CPU and poll the interrupts resulting in additional power savings.

7.36.5 Peripheral power control

A power control for peripherals feature allows individual peripherals to be turned off if they are not needed in the application, resulting in additional power savings.

7.36.6 Power domains

The LPC408x/7x provide two independent power domains that allow the bulk of the device to have power removed while maintaining operation of the RTC and the backup registers.

On the LPC408x/7x, I/O pads are powered by $V_{DD(3V3)}$, while $V_{DD(REG)(3V3)}$ powers the on-chip voltage regulator which in turn provides power to the CPU and most of the peripherals.

Depending on the LPC408x/7x application, a design can use two power options to manage power consumption.

The first option assumes that power consumption is not a concern and the design ties the $V_{DD(3V3)}$ and $V_{DD(REG)(3V3)}$ pins together. This approach requires only one 3.3 V power supply for both pads, the CPU, and peripherals. While this solution is simple, it does not support powering down the I/O pad ring “on the fly” while keeping the CPU and peripherals alive.

All information provided in this document is subject to legal disclaimers.

© NXP Semiconductors N.V. 2017. All rights reserved.

The second option uses two power supplies; a 3.3 V supply for the I/O pads ($V_{DD(3V3)}$) and a dedicated 3.3 V supply for the CPU ($V_{DD(REG)(3V3)}$). Having the on-chip voltage regulator powered independently from the I/O pad ring enables shutting down of the I/O pad power supply “on the fly” while the CPU and peripherals stay active.

The VBAT pin supplies power only to the RTC domain. The RTC requires a minimum of power to operate, which can be supplied by an external battery. The device core power ($V_{DD(REG)(3V3)}$) is used to operate the RTC whenever $V_{DD(REG)(3V3)}$ is present. There is no power drain from the RTC battery when $V_{DD(REG)(3V3)}$ is available and $V_{DD(REG)(3V3)} > V_{BAT}$.

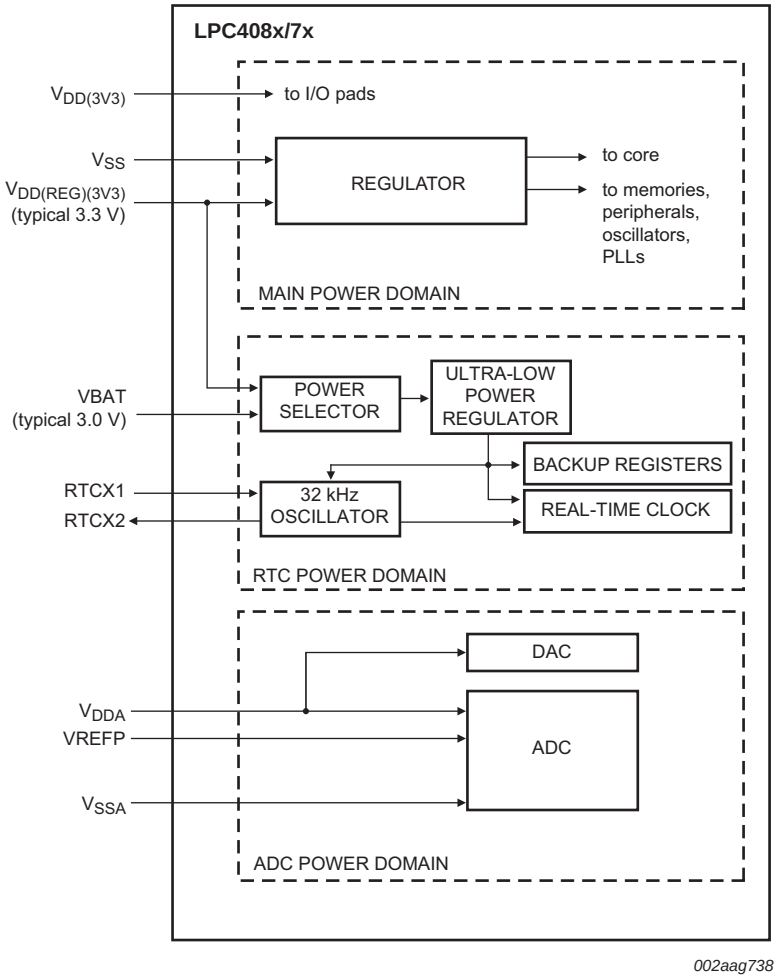

Fig 11. Power distribution

All information provided in this document is subject to legal disclaimers.

© NXP Semiconductors N.V. 2017. All rights reserved.

7.37 System control

7.37.1 Reset

Reset has four sources on the LPC408x/7x: the $\overline{\text{RESET}}$ pin, the Watchdog reset, Power-On Reset (POR), and the BrownOut Detection (BOD) circuit. The $\overline{\text{RESET}}$ pin is a Schmitt trigger input pin. Assertion of chip Reset by any source, once the operating voltage attains a usable level, starts the Wake-up timer (see description in Section 7.36.3), causing reset to remain asserted until the external Reset is de-asserted, the oscillator is running, a fixed number of clocks have passed, and the flash controller has completed its initialization.

When the internal Reset is removed, the processor begins executing at address 0, which is initially the Reset vector mapped from the boot block. At that point, all of the processor and peripheral registers have been initialized to predetermined values.

7.37.2 Brownout detection

The LPC408x/7x include 2-stage monitoring of the voltage on the $V_{DD(REG)(3V3)}$ pins. If this voltage falls below 2.2 V (typical), the BOD asserts an interrupt signal to the Vectored Interrupt Controller. This signal can be enabled for interrupt in the Interrupt Enable Register in the NVIC in order to cause a CPU interrupt; if not, software can monitor the signal by reading a dedicated status register.

The second stage of low-voltage detection asserts reset to inactivate the LPC408x/7x when the voltage on the $V_{DD(REG)(3V3)}$ pins falls below 1.85 V (typical). This reset prevents alteration of the flash as operation of the various elements of the chip would otherwise become unreliable due to low voltage. The BOD circuit maintains this reset down below 1 V, at which point the power-on reset circuitry maintains the overall reset.

Both the 2.2 V and 1.85 V thresholds include some hysteresis. In normal operation, this hysteresis allows the 2.2 V detection to reliably interrupt, or a regularly executed event loop to sense the condition.

7.37.3 Code security (Code Read Protection - CRP)

This feature of the LPC408x/7x allows user to enable different levels of security in the system so that access to the on-chip flash and use of the JTAG and ISP can be restricted. When needed, CRP is invoked by programming a specific pattern into a dedicated flash location. IAP commands are not affected by the CRP.

There are three levels of the Code Read Protection.

CRP1 disables access to chip via the JTAG and allows partial flash update (excluding flash sector 0) using a limited set of the ISP commands. This mode is useful when CRP is required and flash field updates are needed but all sectors can not be erased.

CRP2 disables access to chip via the JTAG and only allows full flash erase and update using a reduced set of the ISP commands.

Running an application with level CRP3 selected fully disables any access to chip via the JTAG pins and the ISP. This mode effectively disables ISP override using P2[10] pin, too. It is up to the user's application to provide (if needed) flash update mechanism using IAP calls or call reinvoke ISP command to enable flash update via UART0.

All information provided in this document is subject to legal disclaimers.

© NXP Semiconductors N.V. 2017. All rights reserved.

CAUTION

If level three Code Read Protection (CRP3) is selected, no future factory testing can be performed on the device.

7.37.4 APB interface

The APB peripherals are split into two separate APB buses in order to distribute the bus bandwidth and thereby reducing stalls caused by contention between the CPU and the GPDMA controller.

7.37.5 AHB multilayer matrix

The LPC408x/7x use an AHB multilayer matrix. This matrix connects the instruction (I-code) and data (D-code) CPU buses of the ARM Cortex-M4 to the flash memory, the main (32 kB) static RAM, and the Boot ROM. The GPDMA can also access all of these memories. Additionally, the matrix connects the CPU system bus and all of the DMA controllers to the various peripheral functions.

7.37.6 External interrupt inputs

The LPC408x/7x include up to 30 edge sensitive interrupt inputs combined with one level sensitive external interrupt input as selectable pin function. The external interrupt input can optionally be used to wake up the processor from Power-down mode.

7.37.7 Memory mapping control

The Cortex-M4 incorporates a mechanism that allows remapping the interrupt vector table to alternate locations in the memory map. This is controlled via the Vector Table Offset Register contained in the NVIC.

The vector table may be located anywhere within the bottom 1 GB of Cortex-M4 address space. The vector table must be located on a 128 word (512 byte) boundary because the NVIC on the LPC408x/7x is configured for 128 total interrupts.

7.38 Debug control

Debug and trace functions are integrated into the ARM Cortex-M4. Serial wire debug and trace functions are supported in addition to a standard JTAG debug and parallel trace functions. The ARM Cortex-M4 is configured to support up to eight breakpoints and four watch points.

8. Limiting values

Table 7. Limiting values

In accordance with the Absolute Maximum Rating System (IEC 60134).[1]

Symbol	Parameter	Conditions		Min	Max	Unit
$V_{DD(3V3)}$	supply voltage (3.3 V)	external rail		–0.5	+4.6	V
$V_{DD(REG)(3V3)}$	regulator supply voltage (3.3 V)			–0.5	+4.6	V
V_{DDA}	analog 3.3 V pad supply voltage			–0.5	+4.6	V
$V_{i(VBAT)}$	input voltage on pin VBAT	for the RTC		–0.5	+4.6	V

All information provided in this document is subject to legal disclaimers.

© NXP Semiconductors N.V. 2017. All rights reserved.

Table 7. Limiting values *...continued*

In accordance with the Absolute Maximum Rating System (IEC 60134).[1]

Symbol	Parameter	Conditions		Min	Max	Unit
$V_{i(VREFP)}$	input voltage on pin VREFP			–0.5	+4.6	V
V_{IA}	analog input voltage	on ADC related pins		–0.5	+5.1	V
V_I	input voltage	5 V tolerant digital I/O pins; $V_{DD(3V3)} \geq 2.4V$	[2]	–0.5	+5.5	V
		$V_{DD(3V3)} = 0$ V		–0.5	+3.6	V
		other I/O pins	[2][3]	–0.5	$V_{DD(3V3)}$ + 0.5	V
I_{DD}	supply current	per supply pin		-	100	mA
I_{SS}	ground current	per ground pin		-	100	mA
I_{latch}	I/O latch-up current	$-(0.5V_{DD(3V3)}) < V_I < (1.5V_{DD(3V3)})$; $T_j < 125$ °C		-	100	mA
T_{stg}	storage temperature	non-operating	[4]	–65	+150	°C
$P_{tot(pack)}$	total power dissipation (per package)	based on package heat transfer, not device power consumption		-	1.5	W
V_{ESD}	electrostatic discharge voltage	human body model; all pins	[5]	-	4000	V

[1] The following applies to the limiting values:

a) This product includes circuitry specifically designed for the protection of its internal devices from the damaging effects of excessive static charge. Nonetheless, it is suggested that conventional precautions be taken to avoid applying greater than the rated maximum.

b) Parameters are valid over operating temperature range unless otherwise specified. All voltages are with respect to V_{SS} unless otherwise noted.

[2] Including voltage on outputs in 3-state mode.

[3] Not to exceed 4.6 V.

[4] The maximum non-operating storage temperature is different than the temperature for required shelf life which should be determined based on the required shelf lifetime. Please refer to the JEDEC spec for further details.

[5] Human body model: equivalent to discharging a 100 pF capacitor through a 1.5 kΩ series resistor.

9. Thermal characteristics

The average chip junction temperature, T_j (°C), can be calculated using the following equation:

$$T_j = T_{amb} + (P_D \times R_{th(j-a)}) \quad (1)$$

- T_{amb} = ambient temperature (°C),
- $R_{th(j-a)}$ = the package junction-to-ambient thermal resistance (°C/W)
- P_D = sum of internal and I/O power dissipation

All information provided in this document is subject to legal disclaimers.

© NXP Semiconductors N.V. 2017. All rights reserved.

Table 8. Thermal characteristics

V_{DD} = 3.0 V to 3.6 V; T_{amb} = –40 °C to +85 °C unless otherwise specified;

Symbol	Parameter	Conditions	Min	Typ	Max	Unit
$T_{j(max)}$	maximum junction temperature		-	-	125	°C

Table 9. Thermal resistance (LQFP packages)

T_{amb} = –40 °C to +85 °C unless otherwise specified.

		Thermal resistance value (°C/W): ±15 %		
		LQFP80	LQFP144	LQFP208
θja				
	JEDEC (4.5 in × 4 in)			
	0 m/s	41	31	27
	1 m/s	35	28	25
	2.5 m/s	32	26	24
	Single-layer (4.5 in × 3 in)			
	0 m/s	61	43	35
	1 m/s	47	35	31
	2.5 m/s	43	33	29
θjc		7.8	9.2	10.5
θjb		11.6	13.5	15.2

Table 10. Thermal resistance value (TFBGA packages)

T_{amb} = –40 °C to +85 °C unless otherwise specified.

		Thermal resistance value (°C/W): ±15 %	
		TFBGA180	TFBGA208
θja			
	JEDEC (4.5 in × 4 in)		
	0 m/s	47	43
	1 m/s	39	37
	2.5 m/s	35	33
	8-layer (4.5 in × 3 in)		
	0 m/s	39	37
	1 m/s	35	33
	2.5 m/s	31	30
θjc		8.5	7.4
θjb		13	16

All information provided in this document is subject to legal disclaimers.

© NXP Semiconductors N.V. 2017. All rights reserved.

10. Static characteristics

Table 11. Static characteristics

T_{amb} = −40 °C to +85 °C, unless otherwise specified.

Symbol	Parameter	Conditions		Min	Typ[1]	Max	Unit
Supply pins							
$V_{DD(3V3)}$	supply voltage (3.3 V)	external rail	[2]	2.4	3.3	3.6	V
$V_{DD(REG)(3V3)}$	regulator supply voltage (3.3 V)			2.4	3.3	3.6	V
V_{DDA}	analog 3.3 V pad supply voltage		[3]	2.7	3.3	3.6	V
$V_{i(VBAT)}$	input voltage on pin VBAT		[4]	2.1	3.0	3.6	V
$V_{i(VREFP)}$	input voltage on pin VREFP		[3]	2.7	3.3	V_{DDA}	V
$I_{DD(REG)(3V3)}$	regulator supply current (3.3 V)	active mode; code `while(1){}` executed from flash; all peripherals disabled PCLK = CCLK/4					
		CCLK = 12 MHz; PLL disabled	[5][6]	-	7.5	-	mA
		CCLK = 120 MHz; PLL enabled	[5][7]	-	56	-	mA
		active mode; code `while(1){}` executed from flash; all peripherals enabled; PCLK = CCLK/4					
		CCLK = 12 MHz; PLL disabled	[5][6]		14	-	-
		CCLK = 120 MHz; PLL enabled	[5][7]		120	-	mA
		Sleep mode	[5][8]	-	5.5	-	mA
		Deep-sleep mode	[5][9]	-	550	1200	μA
		Power-down mode	[5][9]	-	280	600	μA
I_{BAT}	battery supply current	RTC running; part powered down; $V_{DD(REG)(3V3)}$ =0 V; $V_{i(VBAT)}$ = 3.0 V; $V_{DD(3V3)}$ = 0 V.	[10]	-	1	9	μA
		part powered; $V_{DD(REG)(3V3)}$ = 3.3 V; $V_{i(VBAT)}$ = 3.0 V	[11]		<10		nA

All information provided in this document is subject to legal disclaimers.

© NXP Semiconductors N.V. 2017. All rights reserved.

Table 11. Static characteristics *...continued*

T_{amb} = –40 °C to +85 °C, unless otherwise specified.

Symbol	Parameter	Conditions		Min	Typ[1]	Max	Unit
Standard port pins, $\overline{RESET}$							
I_{IL}	LOW-level input current	V_I = 0 V; on-chip pull-up resistor disabled		-	0.5	10	nA
I_{IH}	HIGH-level input current	$V_I = V_{DD(3V3)}$; on-chip pull-down resistor disabled		-	0.5	10	nA
V_I	input voltage	pin configured to provide a digital function	[15][16][17]	0	-	5.0	V
V_O	output voltage	output active		0	-	$V_{DD(3V3)}$	V
V_{IH}	HIGH-level input voltage			$0.7V_{DD(3V3)}$	-	-	V
V_{IL}	LOW-level input voltage			-	-	$0.3V_{DD(3V3)}$	V
V_{hys}	hysteresis voltage			0.4	-	-	V
V_{OH}	HIGH-level output voltage	I_{OH} = –4 mA		$V_{DD(3V3)}$ – 0.45	-	-	V
V_{OL}	LOW-level output voltage	I_{OL} = 4 mA		-	-	0.45	V
I_{OH}	HIGH-level output current	$V_{OH} = V_{DD(3V3)}$ – 0.4 V		–4	-	-	mA
I_{OL}	LOW-level output current	V_{OL} = 0.4 V		4	-	-	mA
I_{OHS}	HIGH-level short-circuit output current	V_{OH} = 0 V	[18]	-	-	–50	mA
I_{OLS}	LOW-level short-circuit output current	$V_{OL} = V_{DD(3V3)}$	[18]	-	-	60	mA
I_{pd}	pull-down current	V_I = 5 V		10	50	150	μA
I_{pu}	pull-up current	V_I = 0 V		–15	–50	–85	μA
		$V_{DD(3V3)} < V_I < 5$ V		0	0	0	μA
I^2C-bus pins (P0[27] and P0[28])							
V_{IH}	HIGH-level input voltage			$0.7V_{DD(3V3)}$	-	-	V
V_{IL}	LOW-level input voltage			-	-	$0.3V_{DD(3V3)}$	V
V_{hys}	hysteresis voltage			-	0.05 × $V_{DD(3V3)}$	-	V
V_{OL}	LOW-level output voltage	I_{OLS} = 3 mA		-	-	0.4	V
I_{LI}	input leakage current	$V_I = V_{DD(3V3)}$	[19]	-	2	4	μA
		V_I = 5 V		-	10	22	μA
USB pins							
I_{OZ}	OFF-state output current	0 V < V_I < 3.3 V	[20]	-	-	±10	μA
V_{BUS}	bus supply voltage		[20]	-	-	5.25	V
V_{DI}	differential input sensitivity voltage	|(D+) – (D–)|	[20]	0.2	-	-	V

All information provided in this document is subject to legal disclaimers.

© NXP Semiconductors N.V. 2017. All rights reserved.

Table 11. Static characteristics *...continued*

T_{amb} = −40 °C to +85 °C, unless otherwise specified.

Symbol	Parameter	Conditions		Min	Typ[1]	Max	Unit
V_{CM}	differential common mode voltage range	includes V_{DI} range	[20]	0.8	-	2.5	V
$V_{th(rs)se}$	single-ended receiver switching threshold voltage		[20]	0.8	-	2.0	V
V_{OL}	LOW-level output voltage for low-/full-speed	R_L of 1.5 kΩ to 3.6 V	[20]	-	-	0.18	V
V_{OH}	HIGH-level output voltage (driven) for low-/full-speed	R_L of 15 kΩ to GND	[20]	2.8	-	3.5	V
C_{trans}	transceiver capacitance	pin to GND	[20]	-	-	20	pF
Oscillator pins (see Section 13.2)							
$V_{i(XTAL1)}$	input voltage on pin XTAL1			−0.5	1.8	1.95	V
$V_{o(XTAL2)}$	output voltage on pin XTAL2			−0.5	1.8	1.95	V
$V_{i(RTCX1)}$	input voltage on pin RTCX1			−0.5	-	3.6	V
$V_{o(RTCX2)}$	output voltage on pin RTCX2			−0.5	-	3.6	V

[1] Typical ratings are not guaranteed. The values listed are at room temperature (25 °C), nominal supply voltages.

[2] For USB operation 3.0 V ≤ $V_{DD((3V3)}$ ≤ 3.6 V. Guaranteed by design.

[3] V_{DDA} and VREFP should be tied to $V_{DD(3V3)}$ if the ADC and DAC are not used.

[4] The RTC typically fails when $V_{i(VBAT)}$ drops below 1.6 V.

[5] $V_{DD(REG)(3V3)}$ = 3.3 V; T_{amb} = 25 °C for all power consumption measurements.

[6] Boost control bits in the PBOOST register set to 0x0 (see *LPC408x/7x User manual*).

[7] Boost control bits in the PBOOST register set to 0x3 (see *LPC408x/7x User manual*).

[8] IRC running at 12 MHz; main oscillator and PLL disabled; PCLK = CCLK/4.

[9] BOD disabled.

[10] On pin VBAT; $V_{DD(REG)(3V3)}$ = $V_{DD(3V3)}$ = V_{DDA} = 0; T_{amb} = 25 °C.

[11] On pin VBAT; $V_{DD(REG)(3V3)}$ = $V_{DD(3V3)}$ = V_{DDA} = 3.3 V; T_{amb} = 25 °C.

[12] All internal pull-ups disabled. All pins configured as output and driven LOW. $V_{DD(3V3)}$ = 3.3 V; T_{amb} = 25 °C.

[13] V_{DDA} = 3.3 V; T_{amb} = 25 °C.

[14] $V_{i(VREFP)}$ = 3.3 V; T_{amb} = 25 °C.

[15] Including voltage on outputs in 3-state mode.

[16] $V_{DD(3V3)}$ supply voltages must be present.

[17] 3-state outputs go into 3-state mode in Deep power-down mode.

[18] Allowed as long as the current limit does not exceed the maximum current allowed by the device.

[19] To V_{SS}.

[20] 3.0 V ≤ $V_{DD(3V3)}$ ≤ 3.6 V.

All information provided in this document is subject to legal disclaimers.

© NXP Semiconductors N.V. 2017. All rights reserved.

10.1 Power consumption

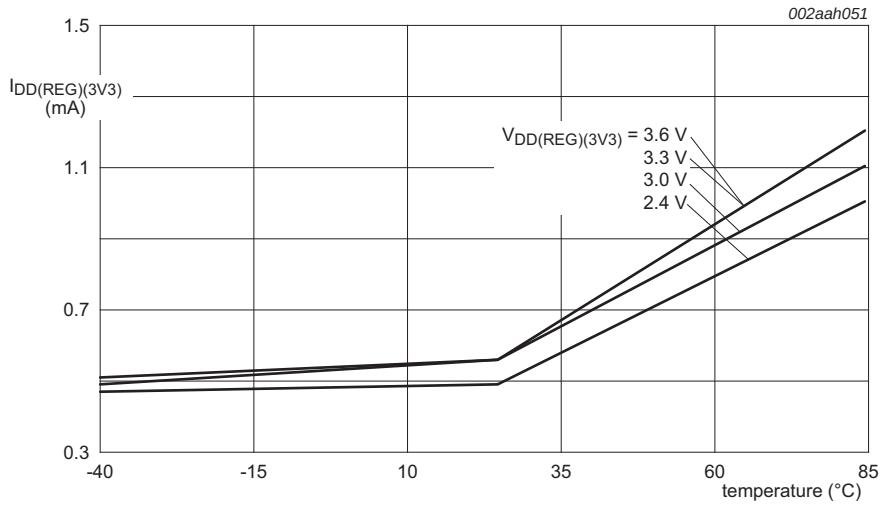

Conditions: BOD disabled.

Fig 12. Deep-sleep mode: Typical regulator supply current $I_{DD(REG)(3V3)}$ versus temperature

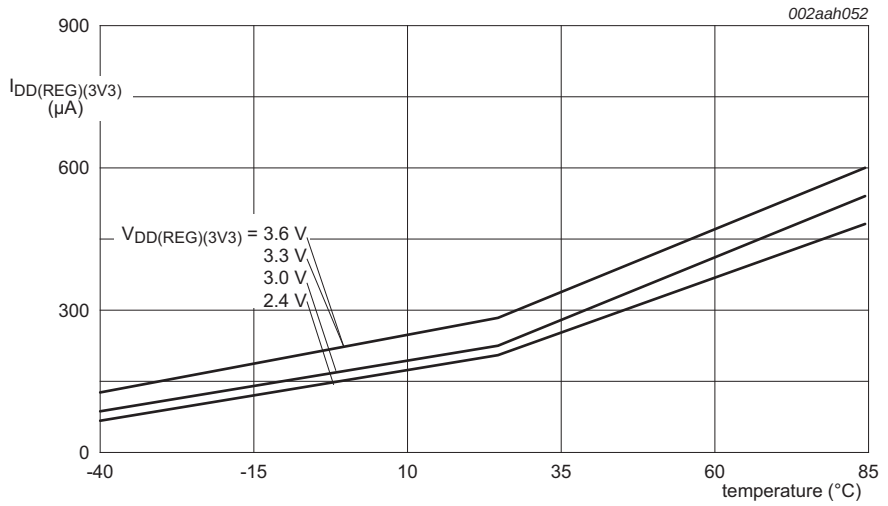

Conditions: BOD disabled.

Fig 13. Power-down mode: Typical regulator supply current $I_{DD(REG)(3V3)}$ versus temperature

All information provided in this document is subject to legal disclaimers.

© NXP Semiconductors N.V. 2017. All rights reserved.

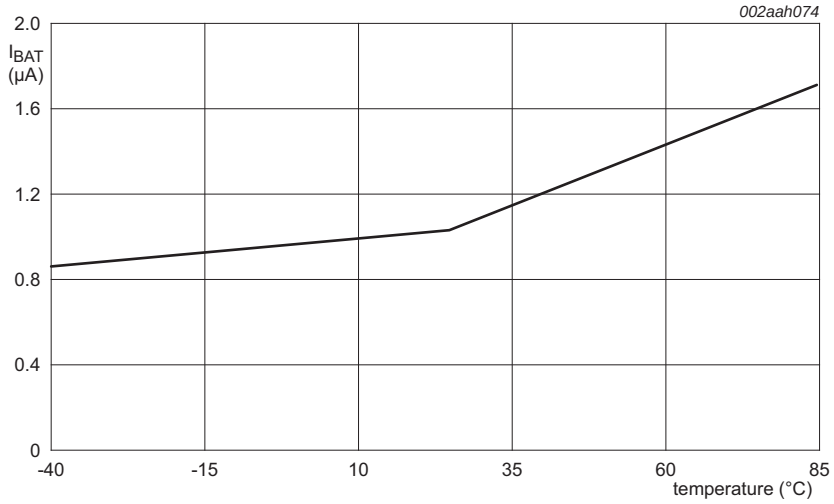

Conditions: $V_{DD(REG)(3V3)} = V_{DDA} = V_{DD(3V3)} = 0$; $V_{BAT} = 3.0$ V.

Fig 14. Part powered off: Typical battery supply current (I_{BAT}) versus temperature

10.2 Peripheral power consumption

The supply current per peripheral is measured as the difference in supply current between the peripheral block enabled and the peripheral block disabled in the PCONP register. All other blocks are disabled and no code is executed. Measured on a typical sample at T_{amb} = 25 °C. The peripheral clock was set to PCLK = CCLK/4 with CCLK = 12 MHz, 48 MHz, and 120 MHz.

The combined current of several peripherals running at the same time can be less than the sum of each individual peripheral current measured separately.

Table 12. Power consumption for individual analog and digital blocks

T_{amb} = 25 °C; $V_{DD(REG)(3V3)} = V_{DD(3V3)} = V_{DDA}$ = 3.3 V; PCLK = CCLK/4.

Peripheral	Conditions	Typical supply current in mA		
		12 MHz[1]	48 MHz[1]	120 MHz[2]
Timer0		0.01	0.06	0.15
Timer1		0.02	0.07	0.16
Timer2		0.02	0.07	0.17
Timer3		0.01	0.07	0.16
Timer0 + Timer1 + Timer2 + Timer3		0.07	0.28	0.67
UART0		0.05	0.19	0.45
UART1		0.06	0.24	0.56
UART2		0.05	0.2	0.47
UART3		0.06	0.23	0.56
USART4		0.07	0.27	0.66
UART0 + UART1 + UART2 + UART3 + USART4		0.29	1.13	2.74
PWM0 + PWM1		0.08	0.31	0.75

All information provided in this document is subject to legal disclaimers.

© NXP Semiconductors N.V. 2017. All rights reserved.

Table 12. Power consumption for individual analog and digital blocks *...continued*

T_{amb} = 25 °C; $V_{DD(REG)(3V3)}$ = $V_{DD(3V3)}$ = V_{DDA} = 3.3 V; PCLK = CCLK/4.

Peripheral	Conditions	Typical supply current in mA		
		12 MHz[1]	48 MHz[1]	120 MHz[2]
Motor control PWM		0.04	0.15	0.36
I2C0		0.01	0.03	0.08
I2C1		0.01	0.03	0.1
I2C2		0.01	0.03	0.08
I2C0 + I2C1 + I2C2		0.02	0.1	0.26
SSP0		0.03	0.1	0.26
SSP1		0.02	0.11	0.27
DAC		0.3	0.31	0.33
ADC (12 MHz clock)		1.51	1.61	1.7
Comparator		0.01	0.03	0.06
CAN1		0.11	0.44	1.08
CAN2		0.1	0.4	0.98
CAN1 + CAN2		0.15	0.59	1.44
DMA	PCLK = CCLK	1.1	4.27	10.27
QEI		0.02	0.11	0.28
GPIO		0.4	1.72	4.16
LCD		0.99	3.84	9.25
I2S		0.04	0.18	0.46
EMC		0.82	3.17	7.63
RTC		0.01	0.01	0.05
USB + PLL1		0.62	0.97	1.67
Ethernet	PCENET bit set to 1 in the PCONP register	0.54	2.08	5.03
SPIFI	SPIFICLKSEL register is set to 0x1	0.89	3.44	8.15

[1] Boost control bits in the PBOOST register set to 0x0 (see *LPC178x/7x User manual UM10470*).

[2] Boost control bits in the PBOOST register set to 0x3 (see *LPC178x/7x User manual UM10470*).

All information provided in this document is subject to legal disclaimers.

© NXP Semiconductors N.V. 2017. All rights reserved.

10.3 Electrical pin characteristics

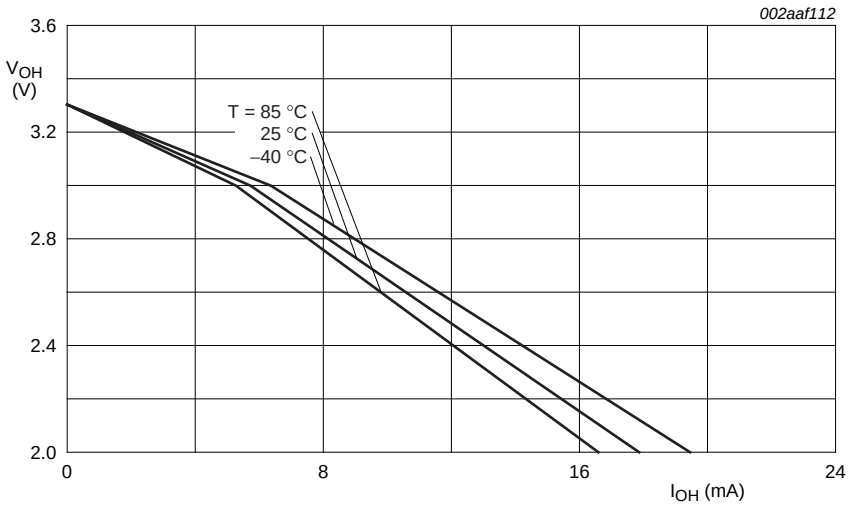

Conditions: $V_{DD(REG)(3V3)} = V_{DD(3V3)} = 3.3$ V; standard port pins.

Fig 15. Typical HIGH-level output voltage V_{OH} versus HIGH-level output source current I_{OH}

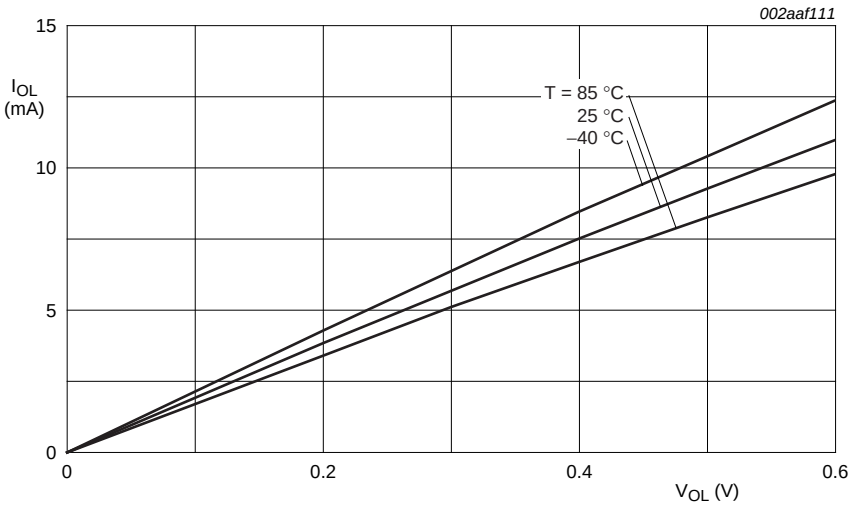

Conditions: $V_{DD(REG)(3V3)} = V_{DD(3V3)} = 3.3$ V; standard port pins.

Fig 16. Typical LOW-level output current I_{OL} versus LOW-level output voltage V_{OL}

All information provided in this document is subject to legal disclaimers.

© NXP Semiconductors N.V. 2017. All rights reserved.

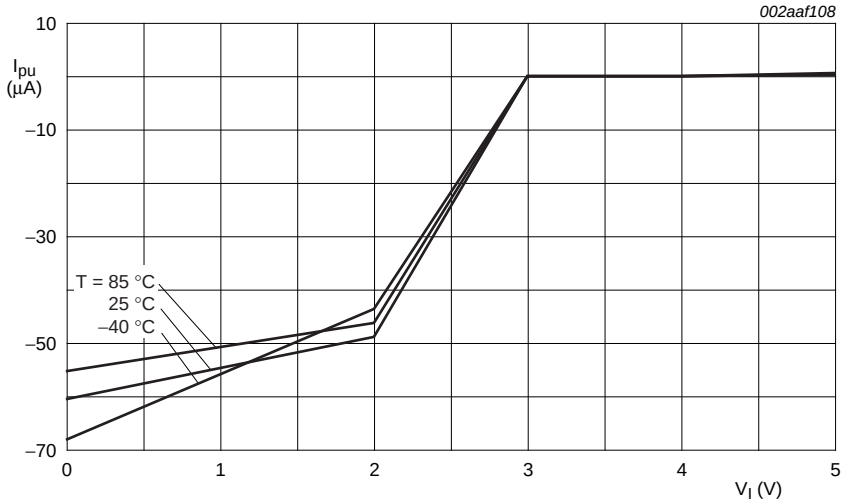

Conditions: $V_{DD(REG)(3V3)} = V_{DD(3V3)} = 3.3$ V; standard port pins.

Fig 17. Typical pull-up current I_{pu} versus input voltage V_I

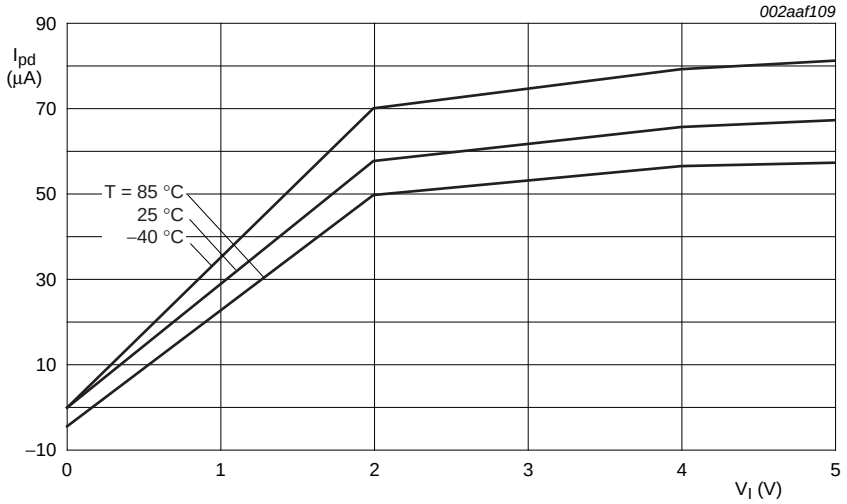

Conditions: $V_{DD(REG)(3V3)} = V_{DD(3V3)} = 3.3$ V; standard port pins.

Fig 18. Typical pull-down current I_{pd} versus input voltage V_I

All information provided in this document is subject to legal disclaimers.

© NXP Semiconductors N.V. 2017. All rights reserved.

11. Dynamic characteristics

11.1 Flash memory

Table 13. Flash characteristics

T_{amb} = −40 °C to +85 °C, unless otherwise specified.

Symbol	Parameter	Conditions		Min	Typ	Max	Unit
N_{endu}	endurance		[1]	10000	100000	-	cycles
t_{ret}	retention time	powered		10	-	-	years
		unpowered		20	-	-	years
t_{er}	erase time	sector or multiple consecutive sectors		95	100	105	ms
t_{prog}	programming time		[2]	0.95	1	1.05	ms

[1] Number of program/erase cycles.

[2] Programming times are given for writing 256 bytes from RAM to the flash. Data must be written to the flash in blocks of 256 bytes.

Table 14. EEPROM characteristics

T_{amb} = −40 °C to +85 °C; $V_{DD(REG)(3V3)}$ = 2.7 V to 3.6 V.

Symbol	Parameter	Conditions		Min	Typ	Max	Unit
f_{clk}	clock frequency			200	375	400	kHz
N_{endu}	endurance			100000	500000	-	cycles
t_{ret}	retention time	powered		10	-	-	years
		unpowered		10	-	-	years
t_{er}	erase time	64 bytes	[1]	-	1.8	-	ms
t_{prog}	programming time	64 bytes	[1]	-	1.1	-	ms

[1] EEPROM clock frequency = 375 kHz. Programming/erase times increase with decreasing EEPROM clock frequency.

11.2 External memory interface

Table 15. Dynamic characteristics: Static external memory interface

C_L = 30 pF, T_{amb} = −40 °C to 85 °C, $V_{DD(3V3)}$ = 3.0 V to 3.6 V. Values guaranteed by design.

Symbol	Parameter[1]	Conditions[1]		Min	Typ	Max	Unit
Read cycle parameters[2]							
t_{CSLAV}	$\overline{CS}$ LOW to address valid time	RD_1		3.3	4.3	6.1	ns
t_{CSLOEL}	$\overline{CS}$ LOW to $\overline{OE}$ LOW time	RD_2	[3]	2.4 + $T_{cy(clk)}$ × WAITOEN	3.1 + $T_{cy(clk)}$ × WAITOEN	4.2 + $T_{cy(clk)}$ × WAITOEN	ns
$t_{CSLBLSL}$	$\overline{CS}$ LOW to $\overline{BLS}$ LOW time	RD_3; PB = 1	[3]	2.7	3.5	4.9	ns
t_{OELOEH}	$\overline{OE}$ LOW to $\overline{OE}$ HIGH time	RD_4	[3]	(WAITRD − WAITOEN + 1) × $T_{cy(clk)}$ − 2.2	(WAITRD − WAITOEN + 1) × $T_{cy(clk)}$ − 2.8	(WAITRD − WAITOEN + 1) × $T_{cy(clk)}$ − 3.8	ns

All information provided in this document is subject to legal disclaimers.

© NXP Semiconductors N.V. 2017. All rights reserved.

Table 15. Dynamic characteristics: Static external memory interface *...continued*

C_L = 30 pF, T_{amb} = −40 °C to 85 °C, $V_{DD(3V3)}$ = 3.0 V to 3.6 V. Values guaranteed by design.

Symbol	Parameter[1]	Conditions[1]		Min	Typ	Max	Unit
t_{am}	memory access time	RD_5	[4][3]	(WAITRD − WAITOEN + 1) × $T_{cy(clk)}$ − 9.6	(WAITRD − WAITOEN + 1) × $T_{cy(clk)}$ − 13.2	(WAITRD − WAITOEN + 1) × $T_{cy(clk)}$ − 20.2	ns
$t_{h(D)}$	data input hold time	RD_6	[5][3]	−5.0	−7.2	–	ns
$t_{CSHBLSH}$	$\overline{CS}$ HIGH to $\overline{BLS}$ HIGH time	PB = 1		2.7	3.4	4.9	ns
t_{CSHOEH}	$\overline{CS}$ HIGH to $\overline{OE}$ HIGH time		[3]	2.4	3.1	4.2	ns
t_{OEHANV}	$\overline{OE}$ HIGH to address invalid time		[3]	0.77	1.2	1.86	ns
t_{deact}	deactivation time	RD_7	[3]	-	−4.3	−6.1	ns
Write cycle parameters[2]							
t_{CSLAV}	$\overline{CS}$ LOW to address valid time	WR_1		3.3	4.3	6.1	ns
t_{CSLDV}	$\overline{CS}$ LOW to data valid time	WR_2		3.4	4.8	6.6	ns
t_{CSLWEL}	$\overline{CS}$ LOW to $\overline{WE}$ LOW time	WR_3; PB =1	[3]	2.6 + $T_{cy(clk)}$ × (1 + WAITWEN)	3.3 + $T_{cy(clk)}$ × (1 + WAITWEN)	4.6 + $T_{cy(clk)}$ × (1 + WAITWEN)	ns
$t_{CSLBLSL}$	$\overline{CS}$ LOW to $\overline{BLS}$ LOW time	WR_4; PB = 1	[3]	2.7	3.5	4.9	ns
t_{WELWEH}	$\overline{WE}$ LOW to $\overline{WE}$ HIGH time	WR_5; PB =1	[3]	(WAITWR − WAITWEN + 1) × $T_{cy(clk)}$ − 2.3	(WAITWR − WAITWEN + 1) × $T_{cy(clk)}$ − 2.8	(WAITWR − WAITWEN + 1) × $T_{cy(clk)}$ − 3.8	ns
$t_{BLSLBLSH}$	$\overline{BLS}$ LOW to $\overline{BLS}$ HIGH time	PB = 1	[3]	(WAITWR − WAITWEN + 3) × $T_{cy(clk)}$ − 2.8	(WAITWR − WAITWEN + 3) × $T_{cy(clk)}$ − 3.5	(WAITWR − WAITWEN + 3) × $T_{cy(clk)}$ − 5.0	ns
t_{WEHDNV}	$\overline{WE}$ HIGH to data invalid time	WR_6; PB =1	[3]	3.1 + $T_{cy(clk)}$	4.3 + $T_{cy(clk)}$	5.8 + $T_{cy(clk)}$	ns
t_{WEHEOW}	$\overline{WE}$ HIGH to end of write time	WR_7; PB = 1	[6][3]	$T_{cy(clk)}$ − 2.6	$T_{cy(clk)}$ − 3.4	$T_{cy(clk)}$ − 4.6	ns
$t_{BLSHDNV}$	$\overline{BLS}$ HIGH to data invalid time	PB = 1		3.4	4.8	6.6	ns
t_{WEHANV}	$\overline{WE}$ HIGH to address invalid time	PB = 1	[3]	3.0 + $T_{cy(clk)}$	3.8 + $T_{cy(clk)}$	5.3 + $T_{cy(clk)}$	ns
t_{deact}	deactivation time	WR_8; PB = 0; PB = 1	[3]	−3.3	−4.3	−6.1	ns
$t_{CSLBLSL}$	$\overline{CS}$ LOW to $\overline{BLS}$ LOW	WR_9; PB = 0	[3]	2.7 + $T_{cy(clk)}$ × (1 + WAITWEN)	3.5 + $T_{cy(clk)}$ × (1 + WAITWEN)	4.9 + $T_{cy(clk)}$ × (1 + WAITWEN)	ns
$t_{BLSLBLSH}$	$\overline{BLS}$ LOW to $\overline{BLS}$ HIGH time	WR_{10}; PB = 0	[3]	(WAITWR − WAITWEN + 3) × $T_{cy(clk)}$ − 2.8	(WAITWR − WAITWEN + 3) × $T_{cy(clk)}$ −3.5	(WAITWR − WAITWEN + 3) × $T_{cy(clk)}$ − 5.0	ns
$t_{BLSHEOW}$	$\overline{BLS}$ HIGH to end of write time	WR_{11}; PB = 0	[6][3]	3.3 + $T_{cy(clk)}$	4.4 + $T_{cy(clk)}$	6.1 + $T_{cy(clk)}$	ns
$t_{BLSHDNV}$	$\overline{BLS}$ HIGH to data invalid time	WR_{12}; PB = 0	[3]	3.4 + $T_{cy(clk)}$	4.8 + $T_{cy(clk)}$	6.6 + $T_{cy(clk)}$	ns

[1] Parameters are shown as RD_n or WD_n in Figure 19 as indicated in the Conditions column.

All information provided in this document is subject to legal disclaimers.

© NXP Semiconductors N.V. 2017. All rights reserved.

[2] Parameters specified for 40 % of $V_{DD(3V3)}$ for rising edges and 60 % of $V_{DD(3V3)}$ for falling edges.

[3] $T_{cy(clk)}$ = 1/EMC_CLK (see *LPC408x/7x User manual*).

[4] Latest of address valid, $\overline{\text{EMC_CSx}}$ LOW, $\overline{\text{EMC_OE}}$ LOW, $\overline{\text{EMC_BLSx}}$ LOW (PB = 1).

[5] After End Of Read (EOR): Earliest of $\overline{\text{EMC_CSx}}$ HIGH, $\overline{\text{EMC_OE}}$ HIGH, $\overline{\text{EMC_BLSx}}$ HIGH (PB = 1), address invalid.

[6] End Of Write (EOW): Earliest of address invalid, $\overline{\text{EMC_CSx}}$ HIGH, $\overline{\text{EMC_BLSx}}$ HIGH (PB = 1).

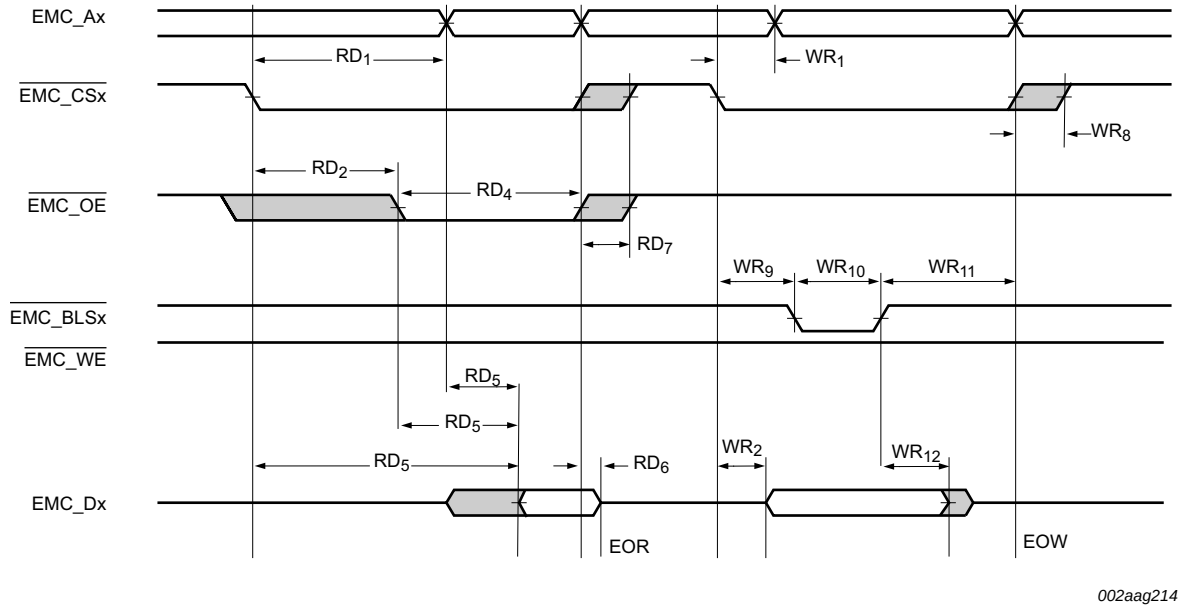

Fig 19. External static memory read/write access (PB = 0)

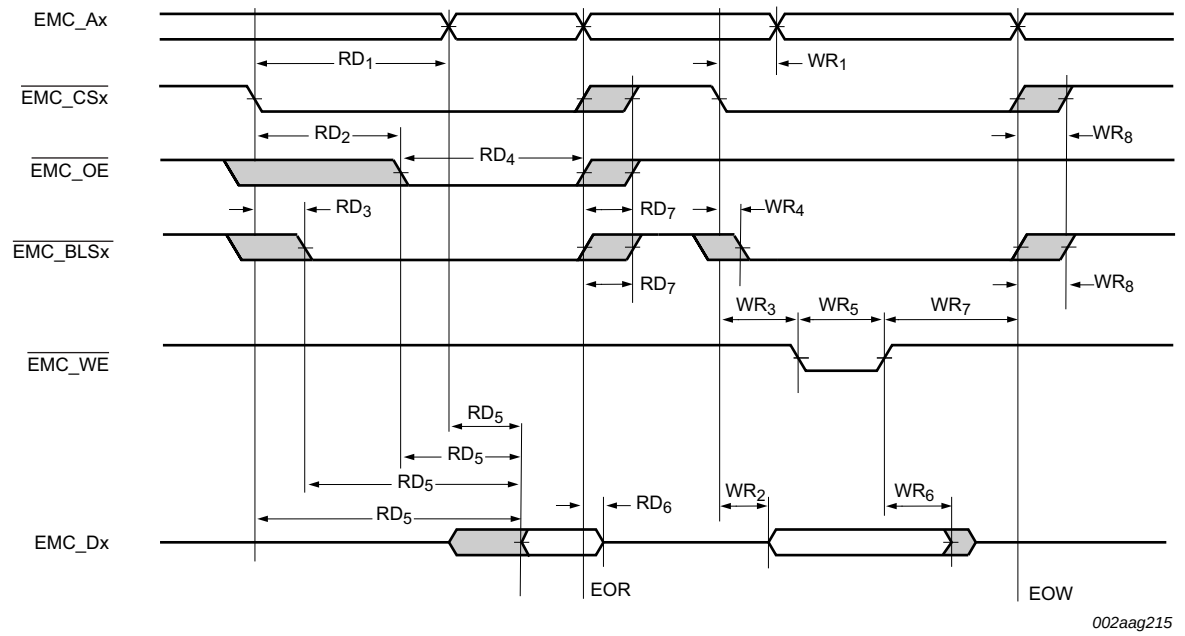

Fig 20. External static memory read/write access (PB =1)

All information provided in this document is subject to legal disclaimers.

© NXP Semiconductors N.V. 2017. All rights reserved.

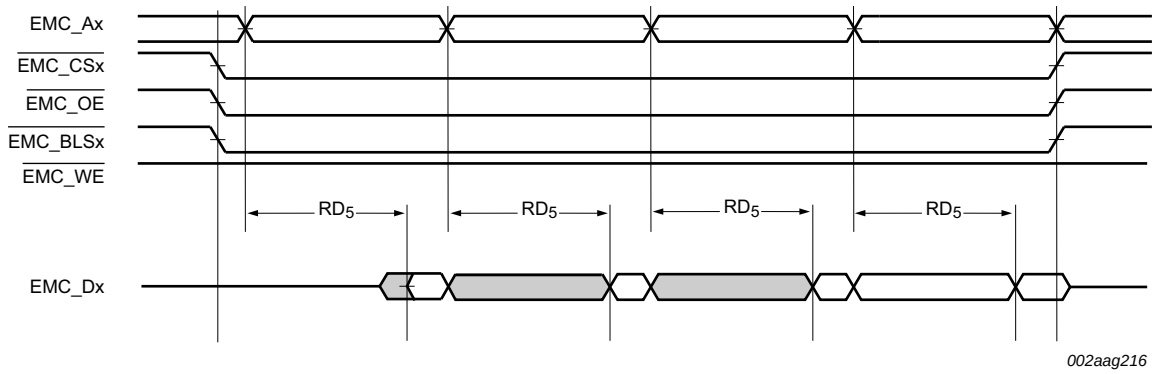

Fig 21. External static memory burst read cycle

All information provided in this document is subject to legal disclaimers.

© NXP Semiconductors N.V. 2017. All rights reserved.

Table 16. Dynamic characteristics: Dynamic external memory interface, read strategy bits (RD bits) = 00

C_L = 30 pF, T_{amb} = −40 °C to 85 °C, $V_{DD(3V3)}$ = 3.0 V to 3.6 V. Values guaranteed by design. t_{fbdly} is programmable delay value for the feedback clock that controls input data sampling; $t_{clk0dly}$ is programmable delay value for the EMC_CLKOUT0 output; $t_{clk1dly}$ is programmable delay value for the EMC_CLKOUT1 output.

Symbol	Parameter		Min	Typ	Max	Unit
Common to read and write cycles						
$T_{cy(clk)}$	clock cycle time	[1]	12.5	-	-	ns
$t_{d(SV)}$	chip select valid delay time	[2]	-	$t_{clkndly}$ + 3.5	$t_{clk0dly}$ + 5.0	ns
$t_{h(S)}$	chip select hold time	[2]	$t_{clkndly}$ - 1.0	$t_{clkndly}$ - 1.2	-	ns
$t_{d(RASV)}$	row address strobe valid delay time	[2]	-	$t_{clkndly}$ + 3.6	$t_{clkndly}$ + 5.0	ns
$t_{h(RAS)}$	row address strobe hold time	[2]	$t_{clkndly}$ - 0.8	$t_{clkndly}$ - 0.9	-	ns
$t_{d(CASV)}$	column address strobe valid delay time	[2]	-	$t_{clkndly}$ + 3.4	$t_{clkndly}$ + 4.9	ns
$t_{h(CAS)}$	column address strobe hold time	[2]	$t_{clkndly}$ - 0.9	$t_{clkndly}$ - 1.0	-	ns
$t_{d(WV)}$	write valid delay time	[2]	-	$t_{clkndly}$ + 4.1	$t_{clkndly}$ + 6.0	ns
$t_{h(W)}$	write hold time	[2]	$t_{clkndly}$ - 0.9	$t_{clkndly}$ - 0.7		ns
$t_{d(AV)}$	address valid delay time	[2]	-	$t_{clkndly}$ + 4.6	$t_{clkndly}$ + 6.8	ns
$t_{h(A)}$	address hold time	[2]	$t_{clkndly}$ - 1.1	$t_{clkndly}$ - 1.2	-	ns
Read cycle parameters when EMC_CLKOUT0 used						
$t_{su(D)}$	data input set-up time		5.6 - t_{fbdly}	4.5 - t_{fbdly}	-	ns
$t_{h(D)}$	data input hold time		-2.2 + t_{fbdly}	-2.9 + t_{fbdly}	-	ns
Read cycle parameters when EMC_CLKOUT1 used						
$t_{su(D)}$	data input set-up time		5.6 - t_{fbdly} + ($t_{clk1dly}$ - $t_{clk0dly}$)	4.5 - t_{fbdly} + ($t_{clk1dly}$ - $t_{clk0dly}$)	-	ns
$t_{h(D)}$	data input hold time		-2.2 + t_{fbdly} - ($t_{clk1dly}$ - $t_{clk0dly}$)	-2.9 + t_{fbdly} - ($t_{clk1dly}$ - $t_{clk0dly}$)	-	ns
Write cycle parameters						
$t_{d(QV)}$	data output valid delay time	[2]	-	$t_{clkndly}$+ 5.4	$t_{clkndly}$+ 7.8	ns
$t_{h(Q)}$	data output hold time	[2]	$t_{clkndly}$ − 0.4	$t_{clkndly}$	-	ns

[1] Refers to SDRAM clock signal EMC_CLKOUTn where n = 0 and 1.

[2] $t_{clkndly}$ represents $t_{clk0dly}$ when EMC_CLKOUT0 clocks SDRAM. $t_{clkndly}$represents $t_{clk1dly}$ when EMC_CLKOUT1 clocks SDRAM.

Table 17. Dynamic characteristics: Dynamic external memory interface, read strategy bits (RD bits) = 01

C_L = 30 pF, T_{amb} = −40 °C to 85 °C, $V_{DD(3V3)}$ = 3.0 V to 3.6 V. Values guaranteed by design. t_{cmddly} is programmable delay value for EMC command outputs in command delayed mode; t_{fbdly} is programmable delay value for the feedback clock that controls input data sampling; $t_{clk0dly}$ is programmable delay value for the EMC_CLKOUT0 output; $t_{clk1dly}$ is programmable delay value for the EMC_CLKOUT1 output.

Symbol	Parameter		Min	Typ	Max	Unit
For RD = 1 $t_{clk0dly}$ = 0 and $t_{clk1dly}$ = 0						
Common to read and write cycles						
$T_{cy(clk)}$	clock cycle time	[1]	12.5	-	-	ns
$t_{d(SV)}$	chip select valid delay time		-	t_{cmddly} + 6.8	t_{cmddly} + 10.4	ns
$t_{h(S)}$	chip select hold time		t_{cmddly} + 1.2	t_{cmddly} + 2.1	-	ns

All information provided in this document is subject to legal disclaimers.

© NXP Semiconductors N.V. 2017. All rights reserved.

Table 17. Dynamic characteristics: Dynamic external memory interface, read strategy bits (RD bits) = 01 *...continued*

C_L = 30 pF, T_{amb} = −40 °C to 85 °C, $V_{DD(3V3)}$ = 3.0 V to 3.6 V. Values guaranteed by design. t_{cmddly} is programmable delay value for EMC command outputs in command delayed mode; t_{fbdly} is programmable delay value for the feedback clock that controls input data sampling; $t_{clk0dly}$ is programmable delay value for the EMC_CLKOUT0 output; $t_{clk1dly}$ is programmable delay value for the EMC_CLKOUT1 output.

Symbol	Parameter		Min	Typ	Max	Unit
$t_{d(RASV)}$	row address strobe valid delay time		-	t_{cmddly} + 6.8	t_{cmddly} + 10.4	ns
$t_{h(RAS)}$	row address strobe hold time		t_{cmddly} + 2.3	t_{cmddly} + 4.3	-	ns
$t_{d(CASV)}$	column address strobe valid delay time		-	t_{cmddly} + 6.7	t_{cmddly} + 10.2	ns
$t_{h(CAS)}$	column address strobe hold time		t_{cmddly} + 2.2	t_{cmddly} + 4.1	-	ns
$t_{d(WV)}$	write valid delay time		-	t_{cmddly} + 7.1	t_{cmddly} + 10.9	ns
$t_{h(W)}$	write hold time		t_{cmddly} + 1.5	t_{cmddly} + 2.7	-	ns
$t_{d(AV)}$	address valid delay time		-	t_{cmddly} + 7.7	t_{cmddly} + 11.9	ns
$t_{h(A)}$	address hold time		t_{cmddly} + 1.0	t_{cmddly} + 1.8	-	ns
Read cycle parameters						
$t_{su(D)}$	data input set-up time		5.6 - t_{fbdly}	4.5 - t_{fbdly}	-	ns
$t_{h(D)}$	data input hold time		-2.2 + t_{fbdly}	-2.9 + t_{fbdly}	-	ns
Write cycle parameters						
$t_{d(QV)}$	data output valid delay time		-	t_{cmddly} + 8.7	t_{cmddly} + 13.1	ns
$t_{h(Q)}$	data output hold time		t_{cmddly} + 1.0	t_{cmddly} + 2.0	-	ns

[1] Refers to SDRAM clock signal EMC_CLKOUTn where n = 0 and 1.

All information provided in this document is subject to legal disclaimers.

© NXP Semiconductors N.V. 2017. All rights reserved.

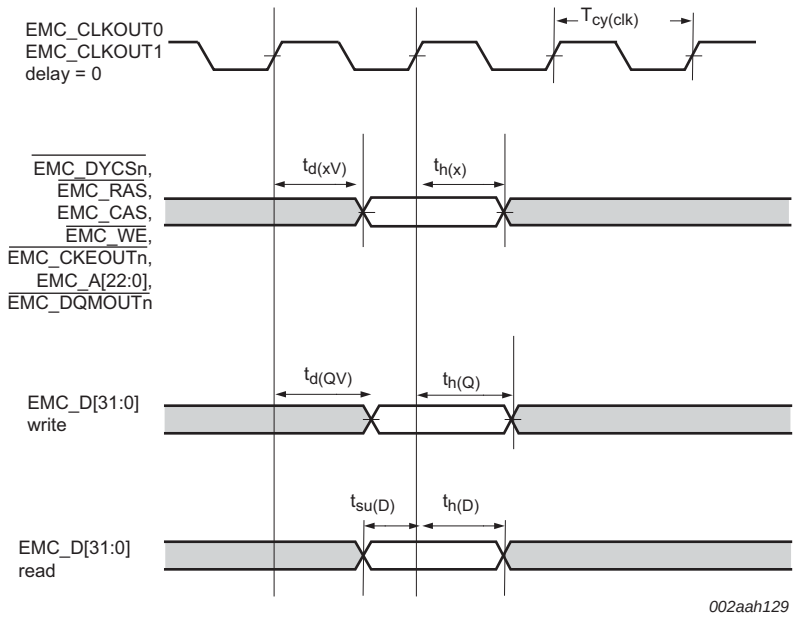

Fig 22. Dynamic external memory interface signal timing

All information provided in this document is subject to legal disclaimers.

© NXP Semiconductors N.V. 2017. All rights reserved.

Table 18. Dynamic characteristics: Dynamic external memory interface programmable clock delays (CMDDLY, FBCLKDLY, CLKOUT0DLY and CLKOUT1DLY)

T_{amb} = −40 °C to 85 °C, $V_{DD(3V3)}$ = 3.0 V to 3.6 V.Values guaranteed by design. t_{cmddly} is programmable delay value for EMC command outputs in command delayed mode; t_{fbdly} is programmable delay value for the feedback clock that controls input data sampling; $t_{clk0dly}$ is programmable delay value for the EMC_CLKOUT0 output; $t_{clk1dly}$ is programmable delay value for the EMC_CLKOUT1 output.

Symbols	Parameter	Five bit value for each delay in EMCDLYCTL[1]	Min	Typ	Max	Unit
t_{cmddly}, t_{fbdly}, $t_{clk0dly}$, $t_{clk1dly}$	delay time	b00000	0.0	0.0	0.0	ns
		b00001	0.1	0.1	0.2	ns
		b00010	0.2	0.3	0.5	ns
		b00011	0.3	0.4	0.7	ns
		b00100	0.5	0.8	1.3	ns
		b00101	0.6	0.9	1.5	ns
		b00110	0.7	1.1	1.8	ns
		b00111	0.8	1.2	2.0	ns
		b01000	1.2	1.8	2.9	ns
		b01001	1.3	1.9	3.1	ns
		b01010	1.4	2.0	3.4	ns
		b01011	1.5	2.1	3.6	ns
		b01100	1.7	2.6	4.2	ns
		b01101	1.8	2.7	4.4	ns
		b01110	1.9	2.9	4.7	ns
		b01111	2.0	3.0	4.9	ns
		b10000	2.4	3.7	6.0	ns
		b10001	2.5	3.8	6.2	ns
		b10010	2.6	4.0	6.5	ns
		b10011	2.7	4.1	6.7	ns
		b10100	2.9	4.5	7.3	ns
		b10101	3.0	4.6	7.5	ns
		b10110	3.1	4.8	7.8	ns
		b10111	3.2	4.9	8.0	ns
		b11000	3.6	5.4	8.9	ns
		b11001	3.7	5.5	9.1	ns
		b11010	3.8	5.7	9.4	ns
		b11011	3.9	5.8	9.6	ns
		b11100	4.1	6.2	10.2	ns
		b11101	4.2	6.3	10.4	ns
		b11110	4.3	6.6	10.7	ns
		b11111	4.4	6.7	10.9	ns

[1] The programmable delay blocks are controlled by the EMCDLYCTL register in the EMC register block. All delay times are incremental delays for each element starting from delay block 0. See the *LPC408x/7x user manual* for details.

All information provided in this document is subject to legal disclaimers.

© NXP Semiconductors N.V. 2017. All rights reserved.

11.3 External clock

Table 19. Dynamic characteristic: external clock (see Figure 40)
T_{amb} = −40 °C to +85 °C; $V_{DD(3V3)}$ over specified ranges.[1]

Symbol	Parameter	Min	Typ[2]	Max	Unit
f_{osc}	oscillator frequency	1	-	25	MHz
$T_{cy(clk)}$	clock cycle time	40	-	1000	ns
t_{CHCX}	clock HIGH time	$T_{cy(clk)} \times 0.4$	-	-	ns
t_{CLCX}	clock LOW time	$T_{cy(clk)} \times 0.4$	-	-	ns
t_{CLCH}	clock rise time	-	-	5	ns
t_{CHCL}	clock fall time	-	-	5	ns

[1] Parameters are valid over operating temperature range unless otherwise specified.

[2] Typical ratings are not guaranteed. The values listed are at room temperature (25 °C), nominal supply voltages.

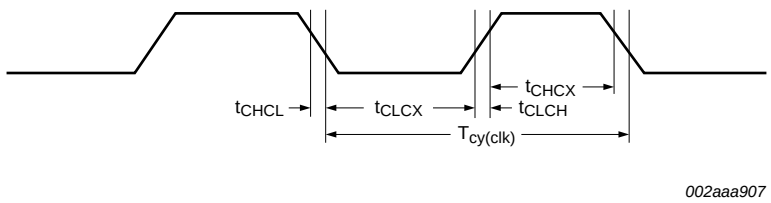

Fig 23. External clock timing (with an amplitude of at least $V_{i(RMS)}$ = 200 mV)

11.4 Internal oscillators

Table 20. Dynamic characteristic: internal oscillators
T_{amb} = −40 °C to +85 °C; 2.7 V ≤ $V_{DD(3V3)}$ ≤ 3.6 V.[1]

Symbol	Parameter	Min	Typ[2]	Max	Unit
$f_{osc(RC)}$	internal RC oscillator frequency	11.88	12	12.12	MHz
$f_{i(RTC)}$	RTC input frequency	-	32.768	-	kHz

[1] Parameters are valid over operating temperature range unless otherwise specified.

[2] Typical ratings are not guaranteed. The values listed are at room temperature (25 °C), nominal supply voltages.

11.5 I/O pins

Table 21. Dynamic characteristic: I/O pins[1]
T_{amb} = −40 °C to +85 °C; $V_{DD(3V3)}$ over specified ranges.

Symbol	Parameter	Conditions	Min	Typ	Max	Unit
t_r	rise time	pin configured as output	3.0	-	5.0	ns
t_f	fall time	pin configured as output	2.5	-	5.0	ns

[1] Applies to standard port pin. For details, see the LPC408x/7x IBIS model available on the NXP website.

All information provided in this document is subject to legal disclaimers.

© NXP Semiconductors N.V. 2017. All rights reserved.

11.6 SSP interface

Table 22. Dynamic characteristics: SSP pins in SPI mode

C_L = 10 pF, T_{amb} = −40 °C to 85 °C, $V_{DD(3V3)}$ = 3.0 V to 3.6 V. Values guaranteed by design.

Symbol	Parameter	Conditions		Min	Max	Unit
SSP master						
$T_{cy(clk)}$	clock cycle time	full-duplex mode	[1]	30	-	ns
		when only transmitting		30	-	ns
t_{DS}	data set-up time	in SPI mode	[2]	14.8	-	ns
t_{DH}	data hold time	in SPI mode	[2]	2	-	ns
$t_{v(Q)}$	data output valid time	in SPI mode	[2]	-	6.3	ns
$t_{h(Q)}$	data output hold time	in SPI mode	[2]	−2.4	-	ns
SSP slave						
$T_{cy(clk)}$	clock cycle time		[3]	100	-	ns
t_{DS}	data set-up time	in SPI mode	[3][4]	14.8	-	ns
t_{DH}	data hold time	in SPI mode	[3][4]	2	-	ns
$t_{v(Q)}$	data output valid time	in SPI mode	[3][4]	-	$3*T_{cy(PCLK)} + 6.3$	ns
$t_{h(Q)}$	data output hold time	in SPI mode	[3][4]	−2.4	-	ns

[1] The minimum clock cycle time, and therefore the maximum frequency of the SSP in master mode, is limited by the pin electronics to the value given. The SSP block should not be configured to generate a clock faster than that. At and below the maximum frequency, $T_{cy(clk)}$ = (SSPCLKDIV × (1 + SCR) × CPSDVSR) / f_{main}. The clock cycle time derived from the SPI bit rate $T_{cy(clk)}$ is a function of the main clock frequency f_{main}, the SSP peripheral clock divider (SSPCLKDIV), the SSP SCR parameter (specified in the SSP0CR0 register), and the SSP CPSDVSR parameter (specified in the SSP clock prescale register).

[2] T_{amb} = −40 °C to 85 °C; $V_{DD(3V3)}$ = 3.0 V to 3.6 V.

[3] $T_{cy(clk)} = 12 \times T_{cy(PCLK)}$. The maximum clock rate in slave mode is 1/12th of the PCLK rate.

[4] T_{amb} = 25 °C; $V_{DD(3V3)}$ = 3.3 V.

All information provided in this document is subject to legal disclaimers.

© NXP Semiconductors N.V. 2017. All rights reserved.

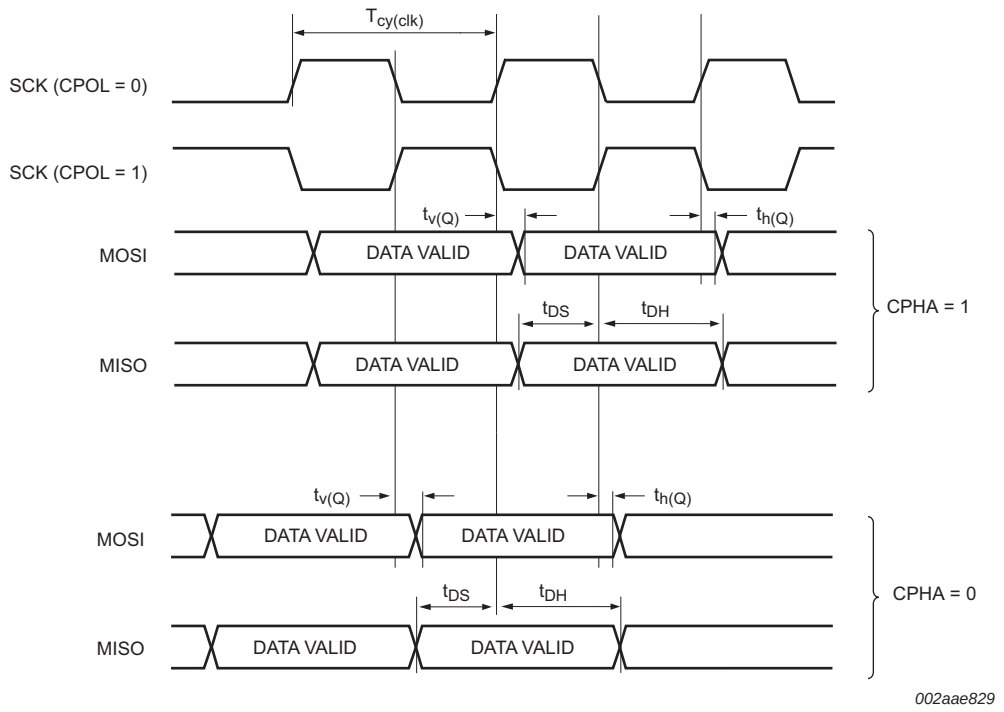

Fig 24. SSP master timing in SPI mode

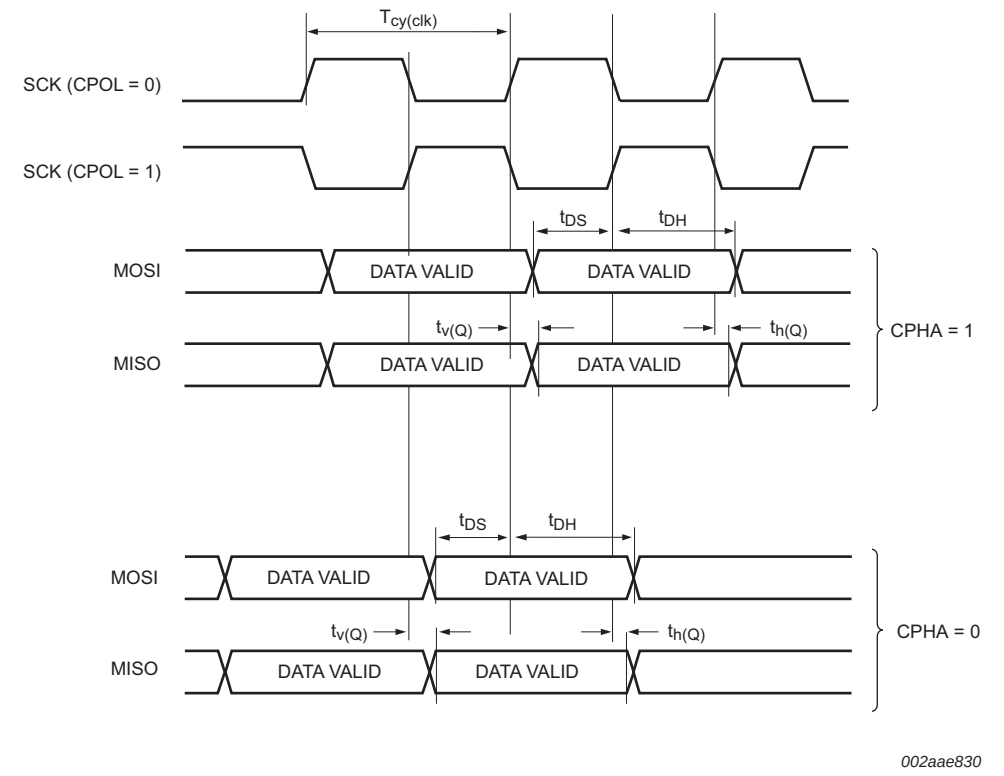

Fig 25. SSP slave timing in SPI mode

All information provided in this document is subject to legal disclaimers.

© NXP Semiconductors N.V. 2017. All rights reserved.

11.7 I²C-bus

Table 23. Dynamic characteristic: I²C-bus pins[1]

T_{amb} = −40 °C to +85 °C.[2]

Symbol	Parameter		Conditions	Min	Max	Unit
f_{SCL}	SCL clock frequency		Standard-mode	0	100	kHz
			Fast-mode	0	400	kHz
			Fast-mode Plus	0	1	MHz
t_f	fall time	[4][5][6][7]	of both SDA and SCL signals Standard-mode	-	300	ns
			Fast-mode	$20 + 0.1 \times C_b$	300	ns
			Fast-mode Plus	-	120	ns
t_{LOW}	LOW period of the SCL clock		Standard-mode	4.7	-	µs
			Fast-mode	1.3	-	µs
			Fast-mode Plus	0.5	-	µs
t_{HIGH}	HIGH period of the SCL clock		Standard-mode	4.0	-	µs
			Fast-mode	0.6	-	µs
			Fast-mode Plus	0.26	-	µs
$t_{HD;DAT}$	data hold time	[3][4][8]	Standard-mode	0	-	µs
			Fast-mode	0	-	µs
			Fast-mode Plus	0	-	µs
$t_{SU;DAT}$	data set-up time	[9][10]	Standard-mode	250	-	ns
			Fast-mode	100	-	ns
			Fast-mode Plus	50	-	ns

[1] See the I²C-bus specification *UM10204* for details.

[2] Parameters are valid over operating temperature range unless otherwise specified.

[3] tHD;DAT is the data hold time that is measured from the falling edge of SCL; applies to data in transmission and the acknowledge.

[4] A device must internally provide a hold time of at least 300 ns for the SDA signal (with respect to the V_{IH}(min) of the SCL signal) to bridge the undefined region of the falling edge of SCL.

[5] C_b = total capacitance of one bus line in pF.

[6] The maximum t_f for the SDA and SCL bus lines is specified at 300 ns. The maximum fall time for the SDA output stage t_f is specified at 250 ns. This allows series protection resistors to be connected in between the SDA and the SCL pins and the SDA/SCL bus lines without exceeding the maximum specified t_f.

[7] In Fast-mode Plus, fall time is specified the same for both output stage and bus timing. If series resistors are used, designers should allow for this when considering bus timing.

[8] The maximum $t_{HD;DAT}$ could be 3.45 µs and 0.9 µs for Standard-mode and Fast-mode but must be less than the maximum of $t_{VD;DAT}$ or $t_{VD;ACK}$ by a transition time (see *UM10204*). This maximum must only be met if the device does not stretch the LOW period (t_{LOW}) of the SCL signal. If the clock stretches the SCL, the data must be valid by the set-up time before it releases the clock.

[9] tSU;DAT is the data set-up time that is measured with respect to the rising edge of SCL; applies to data in transmission and the acknowledge.

[10] A Fast-mode I²C-bus device can be used in a Standard-mode I²C-bus system but the requirement $t_{SU;DAT}$ = 250 ns must then be met. This will automatically be the case if the device does not stretch the LOW period of the SCL signal. If such a device does stretch the LOW period of the SCL signal, it must output the next data bit to the SDA line $t_{r(max)} + t_{SU;DAT}$ = 1000 + 250 = 1250 ns (according to the Standard-mode I²C-bus specification) before the SCL line is released. Also the acknowledge timing must meet this set-up time.

All information provided in this document is subject to legal disclaimers.

© NXP Semiconductors N.V. 2017. All rights reserved.

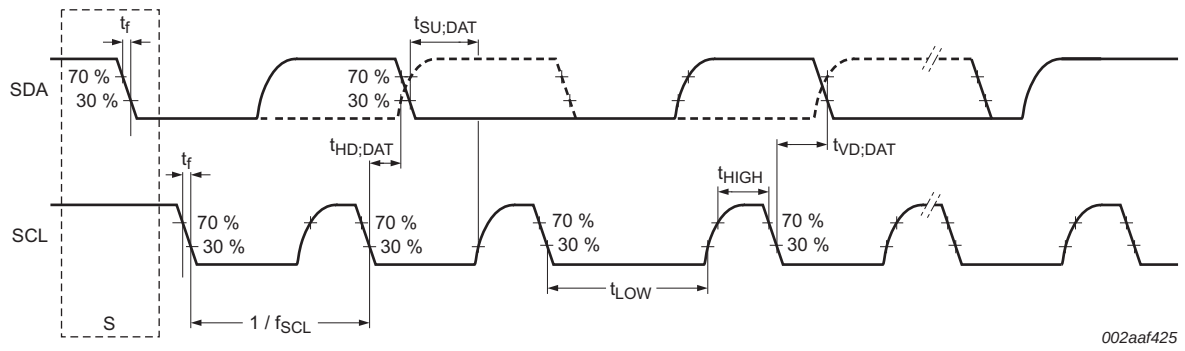

Fig 26. I²C-bus pins clock timing

11.8 I²S-bus interface

Table 24. Dynamic characteristics: I²S-bus interface pins

C_L = 10 pF, T_{amb} = −40 °C to 85 °C, $V_{DD(3V3)}$ = 3.0 V to 3.6 V. Values guaranteed by design.

Symbol	Parameter	Conditions		Min	Max	Unit
common to input and output						
t_r	rise time		[1]	-	6.7	ns
t_f	fall time		[1]	-	8.0	ns
t_{WH}	pulse width HIGH	on pins I2S_TX_SCK and I2S_RX_SCK	[1]	25	-	-
t_{WL}	pulse width LOW	on pins I2S_TX_SCK and I2S_RX_SCK	[1]	-	25	ns
output						
$t_{v(Q)}$	data output valid time	on pin I2S_TX_SDA;	[1]	-	6	ns
input						
$t_{su(D)}$	data input set-up time	on pin I2S_RX_SDA	[1]	5	-	ns
$t_{h(D)}$	data input hold time	on pin I2S_RX_SDA	[1]	2	-	ns

[1] CCLK = 100 MHz; peripheral clock to the I²S-bus interface PCLK = CCLK / 4. I²S clock cycle time $T_{cy(clk)}$ = 1600 ns, corresponds to the SCK signal in the *I²S-bus specification*.

All information provided in this document is subject to legal disclaimers.

© NXP Semiconductors N.V. 2017. All rights reserved.

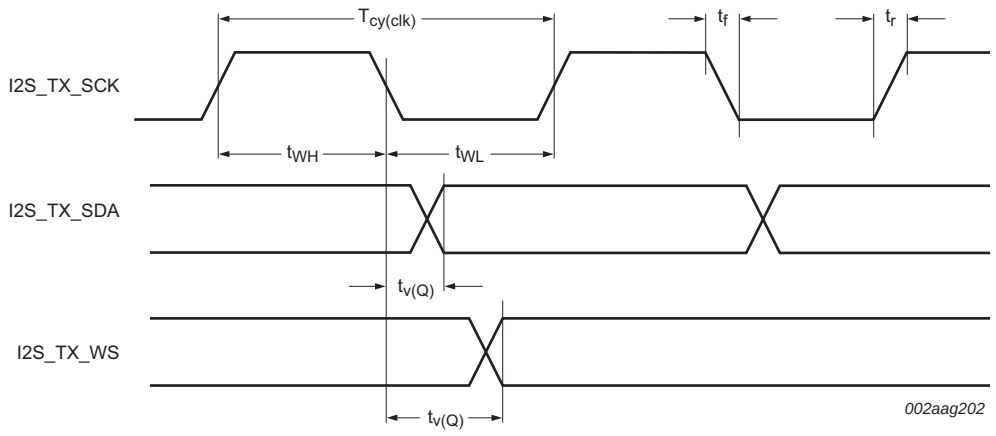

Fig 27. I²S-bus timing (transmit)

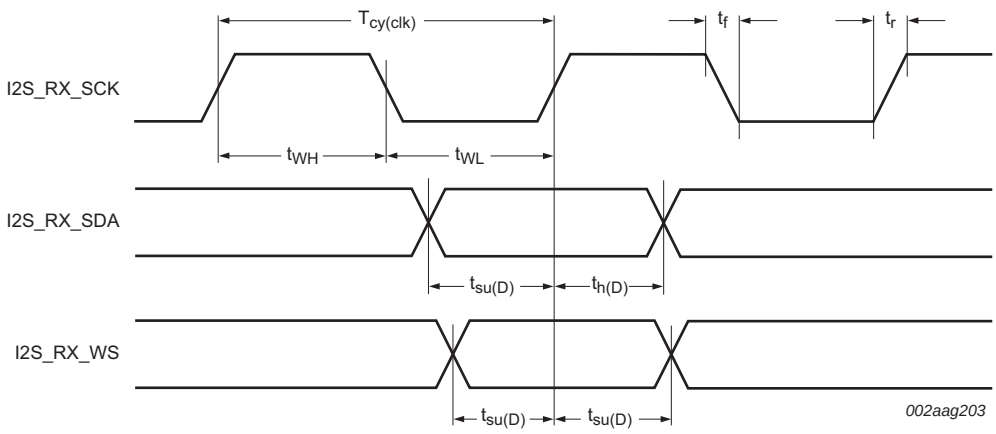

Fig 28. I²S-bus timing (receive)

11.9 LCD

Remark: The LCD controller is available on parts LPC4088.

Table 25. Dynamic characteristics: LCD

C_L = 10 pF, T_{amb} = −40 °C to 85 °C, $V_{DD(3V3)}$ = 3.0 V to 3.6 V. Values guaranteed by design.

Symbol	Parameter	Conditions	Min	Max	Unit
f_{clk}	clock frequency	on pin LCD_DCLK	-	50	MHz
$t_{d(QV)}$	data output valid delay time		-	9	ns
$t_{h(Q)}$	data output hold time		−0.5	-	ns

All information provided in this document is subject to legal disclaimers.

© NXP Semiconductors N.V. 2017. All rights reserved.

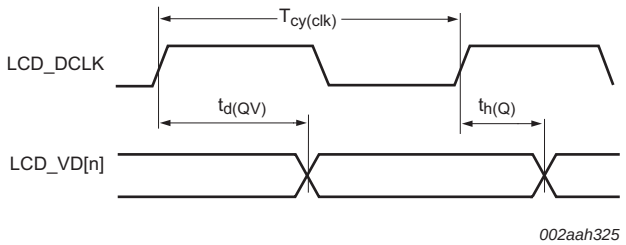

The LCD panel clock is shown with the default polarity. The clock can be inverted via the IPC bit in the LCD_POL register. Typically, the LCD panel uses the falling edge of the LCD_DCLK to sample the data.

Fig 29. LCD timing

11.10 SD/MMC

Remark: The SD/MMC card interface is available on parts LPC4088/78/76.

Table 26. Dynamic characteristics: SD/MMC

C_L = 10 pF, T_{amb} = −40 °C to 85 °C, $V_{DD(3V3)}$ = 3.0 V to 3.6 V. Values guaranteed by design.

Symbol	Parameter	Conditions	Min	Max	Unit
f_{clk}	clock frequency	on pin SD_CLK; data transfer mode	-	25	MHz
		on pin SD_CLK; identification mode		25	MHz
$t_{su(D)}$	data input set-up time	on pins SD_CMD, SD_DAT[3:0] as inputs	6	-	ns
$t_{h(D)}$	data input hold time	on pins SD_CMD, SD_DAT[3:0] as inputs	6	-	ns
$t_{d(QV)}$	data output valid delay time	on pins SD_CMD, SD_DAT[3:0] as outputs	-	23	ns
$t_{h(Q)}$	data output hold time	on pins SD_CMD, SD_DAT[3:0] as outputs	3.5	-	ns

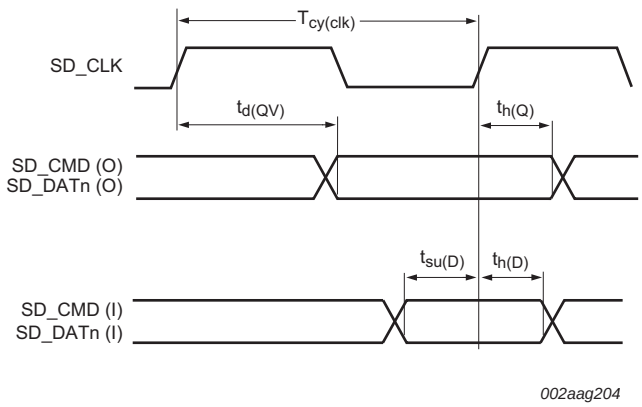

Fig 30. SD/MMC timing

All information provided in this document is subject to legal disclaimers.

© NXP Semiconductors N.V. 2017. All rights reserved.

11.11 SPIFI

Table 27. Dynamic characteristics: SPIFI

T_{amb} = −40 °C to 85 °C; 3.0 V ≤ $V_{DD(3V3)}$ ≤ 3.6 V; C_L = 30 pF. Values guaranteed by design.

Symbol	Parameter	Min	Max	Unit
$T_{cy(clk)}$	clock cycle time	11.8	-	ns
t_{DS}	data set-up time	4.8	-	ns
t_{DH}	data hold time	0	-	ns
$t_{v(Q)}$	data output valid time	-	8.8	ns
$t_{h(Q)}$	data output hold time	3	-	ns

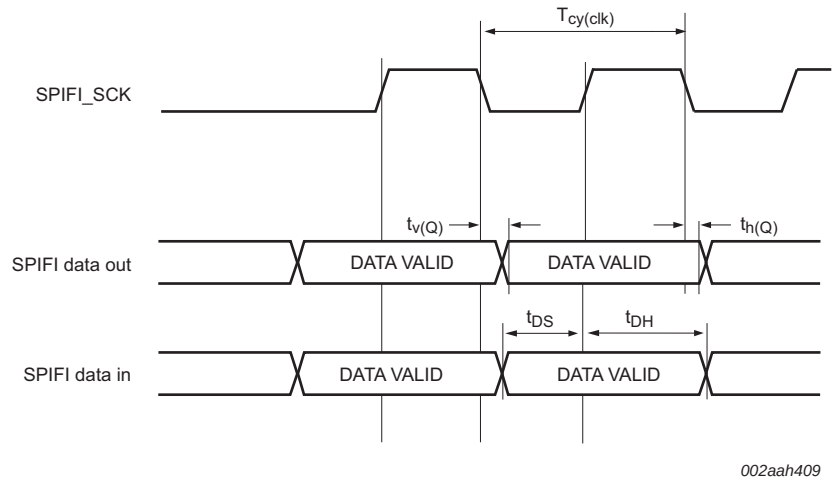

Fig 31. SPIFI timing (Mode 0)

12. Characteristics of the analog peripherals

12.1 ADC electrical characteristics

Table 28. 12-bit ADC characteristics

V_{DDA} = 2.7 V to 3.6 V; T_{amb} = −40 °C to +85 °C unless otherwise specified.[1]

Symbol	Parameter	Conditions		Min	Typ	Max	Unit
V_{IA}	analog input voltage			0	-	V_{DDA}	V
12-bit resolution							
E_D	differential linearity error		[2][3][4]	-	-	±1	LSB
$E_{L(adj)}$	integral non-linearity		[2][5]	-	-	±6	LSB
E_O	offset error		[2][6]	-	-	±5	LSB
E_G	gain error		[2][7]	-	-	±5	LSB
E_T	absolute error		[2][8]	-	-	< ±8	LSB
$f_{clk(ADC)}$	ADC clock frequency			-	-	12.4	MHz

All information provided in this document is subject to legal disclaimers.

© NXP Semiconductors N.V. 2017. All rights reserved.

Table 28. 12-bit ADC characteristics *...continued*

V_{DDA} = 2.7 V to 3.6 V; T_{amb} = −40 °C to +85 °C unless otherwise specified.[1]

Symbol	Parameter	Conditions		Min	Typ	Max	Unit
$f_{c(ADC)}$	ADC conversion frequency	single conversion mode		-	-	400	kSamples/s
		burst mode		-	-	375	kSamples/s
C_{ia}	analog input capacitance			-	-	5	pF
R_{vsi}	voltage source interface resistance		[10]	-	-	1	kΩ
8-bit resolution[11]							
E_D	differential linearity error		[2][3][4]	-	±1	-	LSB
$E_{L(adj)}$	integral non-linearity		[2][5]	-	±1	-	LSB
E_O	offset error		[2][6]	-	±1	-	LSB
E_G	gain error		[2][7]	-	±1	-	LSB
E_T	absolute error		[2][8]	-	-	< ±1.5	LSB
$f_{clk(ADC)}$	ADC clock frequency			-	-	36	MHz
$f_{c(ADC)}$	ADC conversion frequency		[9]	-	-	1.16	MSamples/s
C_{ia}	analog input capacitance			-	-	5	pF
R_{vsi}	voltage source interface resistance		[10]	-	-	1	kΩ

[1] V_{DDA} and VREFP should be tied to $V_{DD(3V3)}$ if the ADC and DAC are not used.

[2] Conditions: V_{SSA} = 0 V, V_{DDA} = 3.3 V.

[3] The ADC is monotonic, there are no missing codes.

[4] The differential linearity error (E_D) is the difference between the actual step width and the ideal step width. See Figure 32.

[5] The integral non-linearity ($E_{L(adj)}$) is the peak difference between the center of the steps of the actual and the ideal transfer curve after appropriate adjustment of gain and offset errors. See Figure 32.

[6] The offset error (E_O) is the absolute difference between the straight line which fits the actual curve and the straight line which fits the ideal curve. See Figure 32.

[7] The gain error (E_G) is the relative difference in percent between the straight line fitting the actual transfer curve after removing offset error, and the straight line which fits the ideal transfer curve. See Figure 32.

[8] The absolute error (E_T) is the maximum difference between the center of the steps of the actual transfer curve of the non-calibrated ADC and the ideal transfer curve. See Figure 32.

[9] In single-conversion mode.

[10] See Figure 33.

[11] 8-bit resolution is achieved by ignoring the lower four bits of the ADC conversion result.

All information provided in this document is subject to legal disclaimers.

© NXP Semiconductors N.V. 2017. All rights reserved.

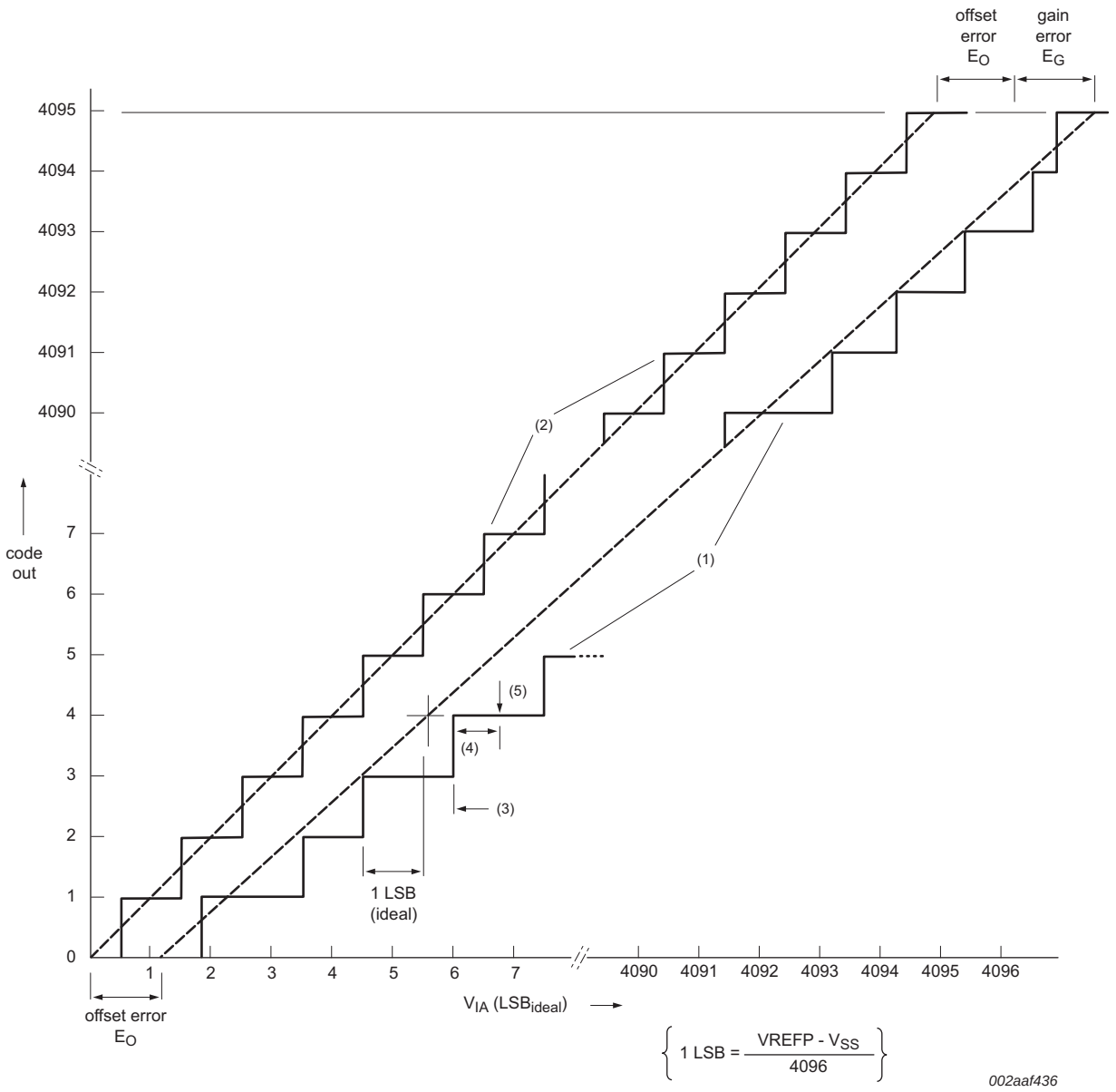

(1) Example of an actual transfer curve.

(2) The ideal transfer curve.

(3) Differential linearity error (E_D).

(4) Integral non-linearity ($E_{L(adj)}$).

(5) Center of a step of the actual transfer curve.

Fig 32. 12-bit ADC characteristics

All information provided in this document is subject to legal disclaimers.

© NXP Semiconductors N.V. 2017. All rights reserved.

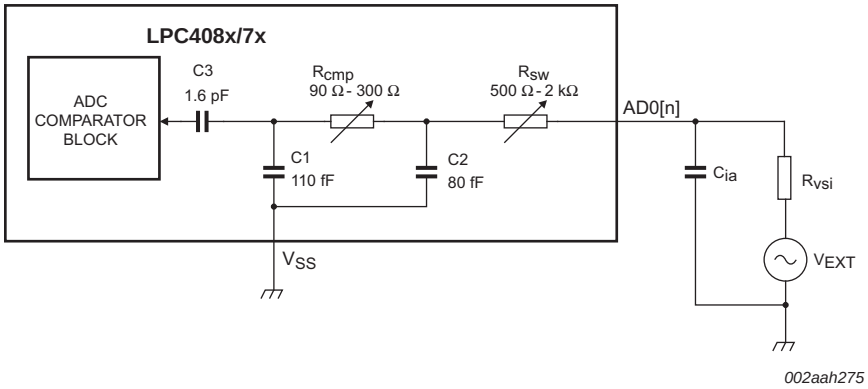

The values of resistor components R_{cmp} and R_{sw} vary with temperature and input voltage and are process-dependent.

Fig 33. ADC interface to pins ADC0_IN[n]

Table 29. ADC interface components

Component	Range	Description
R_{cmp}	90 Ω to 300 Ω	Switch-on resistance for the comparator input switch. Varies with temperature, input voltage, and process.
R_{sw}	500 Ω to 2 kΩ	Switch-on resistance for channel selection switch. Varies with temperature, input voltage, and process.
C1	110 fF	Parasitic capacitance from the ADC block level.
C2	80 fF	Parasitic capacitance from the ADC block level.
C3	1.6 pF	Sampling capacitor.

12.2 DAC electrical characteristics

Table 30. 10-bit DAC electrical characteristics

V_{DDA} = 2.7 V to 3.6 V; T_{amb} = −40 °C to +85 °C unless otherwise specified

Symbol	Parameter	Min	Typ	Max	Unit
E_D	differential linearity error	-	±1	-	LSB
$E_{L(adj)}$	integral non-linearity	-	±1.5	-	LSB
E_O	offset error	-	0.6	-	%
E_G	gain error	-	0.6	-	%
C_L	load capacitance	-	-	200	pF
R_L	load resistance	1	-	-	kΩ

12.3 Comparator electrical characteristics

Table 31. Comparator characteristics

V_{DDA}= 3.0 V and T_{amb} = 25 °C unless noted otherwise.

Symbol	Parameter	Conditions		Min	Typ	Max	Unit
Static characteristics							
I_{DD}	supply current			-	55	-	μA
V_{IC}	common-mode input voltage			0	-	V_{DDA}	V

All information provided in this document is subject to legal disclaimers.

© NXP Semiconductors N.V. 2017. All rights reserved.

Table 31. Comparator characteristics *...continued*

V_{DDA}= 3.0 V and T_{amb} = 25 °C unless noted otherwise.

Symbol	Parameter	Conditions		Min	Typ	Max	Unit
DV_O	output voltage variation			0	-	V_{DDA}	V
V_{offset}	offset voltage	V_{IC} = 0.1 V		-	–4 to +4.2	-	mV
		V_{IC} = 1.5 V		-	±2	-	mV
		V_{IC} = 2.8 V		-	±2.5		mV
Dynamic characteristics							
$t_{startup}$	start-up time	nominal process		-	4	-	µs
t_{PD}	propagation delay	HIGH to LOW; V_{DDA} = 3.3 V; V_{IC} = 0.1 V; 50 mV overdrive input	[1]	122	130	142	ns
		V_{IC} = 0.1 V; rail-to-rail input	[1]	173	189	233	ns
		V_{IC} = 1.5 V; 50 mV overdrive input	[1]	101	108	119	ns
		V_{IC} = 1.5 V; rail-to-rail input	[1]	114	127	162	ns
		V_{IC} = 2.9 V; 50 mV overdrive input	[1]	123	134	143	ns
		V_{IC} = 2.9 V; rail-to-rail input	[1]	79	91	120	ns
t_{PD}	propagation delay	LOW to HIGH; V_{DDA} = 3.3 V; V_{IC} = 0.1 V; 50 mV overdrive input	[1]	221	232	254	ns
		V_{IC} = 0.1 V; rail-to-rail input	[1]	59	63	68	ns
		V_{IC} = 1.5 V; 50 mV overdrive input	[1]	183	229	249	ns
		V_{IC} = 1.5 V; rail-to-rail input	[1]	147	174	213	ns
		V_{IC} = 2.9 V; 50 mV overdrive input	[1]	171	192	216	ns
		V_{IC} = 2.9 V; rail-to-rail input	[1]	235	305	450	ns
V_{hys}	hysteresis voltage	positive hysteresis; V_{DDA} = 3.0 V; V_{IC} = 1.5 V	[2]	-	5, 10, 20	-	mV
V_{hys}	hysteresis voltage	negative hysteresis; V_{DDA} = 3.0 V; V_{IC} = 1.5 V	[2]	-	5, 10, 20	-	mV
R_{lad}	ladder resistance	-		-	1.034	-	MΩ

[1] C_L = 10 pF; results from measurements on silicon samples over process corners and over the full temperature range T_{amb} = -40 °C to +85 °C.

[2] Input hysteresis is relative to the reference input channel and is software programmable.

Table 32. Comparator voltage ladder dynamic characteristics

Symbol	Parameter	Conditions		Min	Typ	Max	Unit
$t_{s(pu)}$	power-up settling time	to 99% of voltage ladder output value	[1]	-	-	30	µs
$t_{s(sw)}$	switching settling time	to 99% of voltage ladder output value	[1] [2]	-	-	15	µs

[1] Maximum values are derived from worst case simulation (V_{DDA} = 2.6 V; T_{amb} = 85 °C; slow process models).

[2] Settling time applies to switching between comparator and ADC channels.

All information provided in this document is subject to legal disclaimers.

© NXP Semiconductors N.V. 2017. All rights reserved.

Table 33. Comparator voltage ladder reference static characteristics
V_{DDA} = 3.3 V; T_{amb} = -40 °C to + 85 °C.

Symbol	Parameter	Conditions		Min	Typ	Max[1]	Unit
$E_{V(O)}$	output voltage error	Internal V_{DDA} supply					
		decimal code = 00		0	0	0	%
		decimal code = 08		–0.45	–0.5	–0.55	%
		decimal code = 16		–0.99	–1.1	–1.21	%
		decimal code = 24		–1.26	–1.4	–1.54	%
		decimal code = 30		–1.35	–1.5	–1.65	%
		decimal code = 31		–1.35	–1.5	–1.65	%
$E_{V(O)}$	output voltage error	External VDDCMP supply					
		decimal code = 00		0	0	0	%
		decimal code = 08		0.44	0.4	0.36	%
		decimal code = 16		–0.18	–0.2	–0.22	%
		decimal code = 24		–0.45	–0.5	–0.55	%
		decimal code = 30		–0.54	–0.6	–0.66	%
		decimal code = 31		–0.45	–0.5	–0.55	%

[1] Measured on typical silicon samples with a 2 kHz input signal and overdrive < 100 μV. Power switched off to all analog peripherals except the comparator.

13. Application information

13.1 Suggested USB interface solutions

Remark: The USB controller is available as a device/Host/OTG controller on parts LPC4088 and LPC4078/76 and as device-only controller on parts LPC4074/72.

All information provided in this document is subject to legal disclaimers.

© NXP Semiconductors N.V. 2017. All rights reserved.

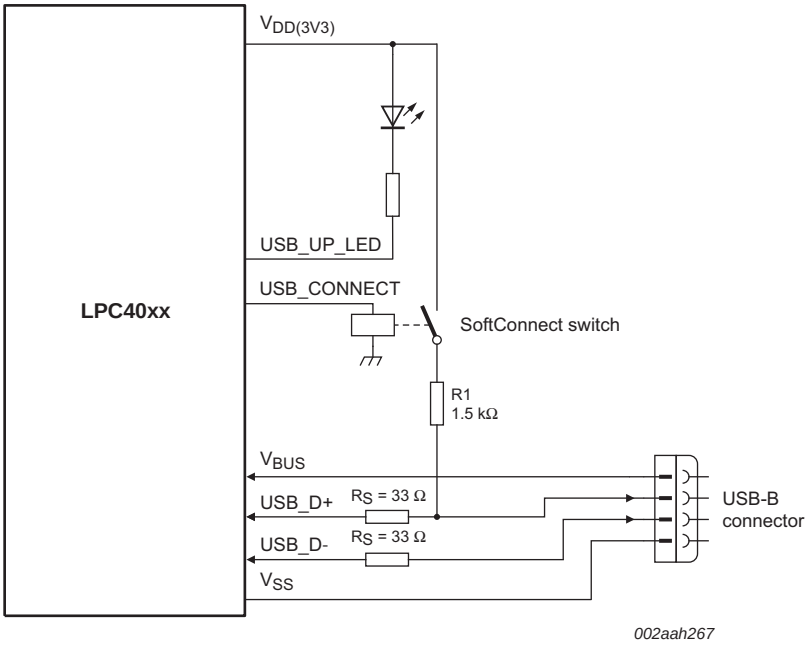

Fig 34. USB interface on a self-powered device

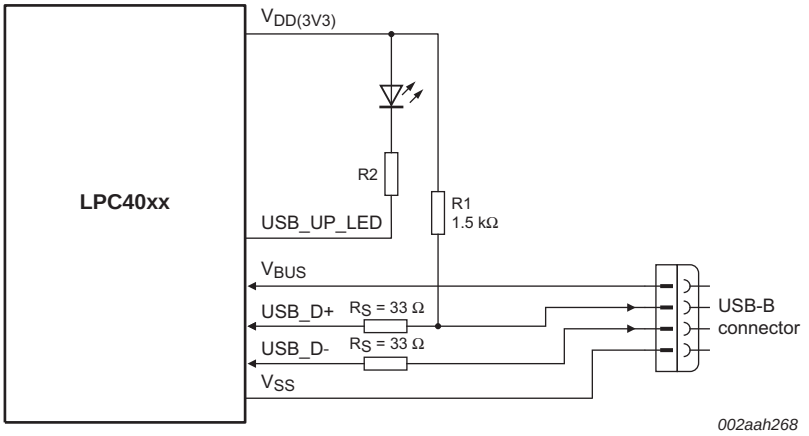

Fig 35. USB interface on a bus-powered device

All information provided in this document is subject to legal disclaimers.

© NXP Semiconductors N.V. 2017. All rights reserved.

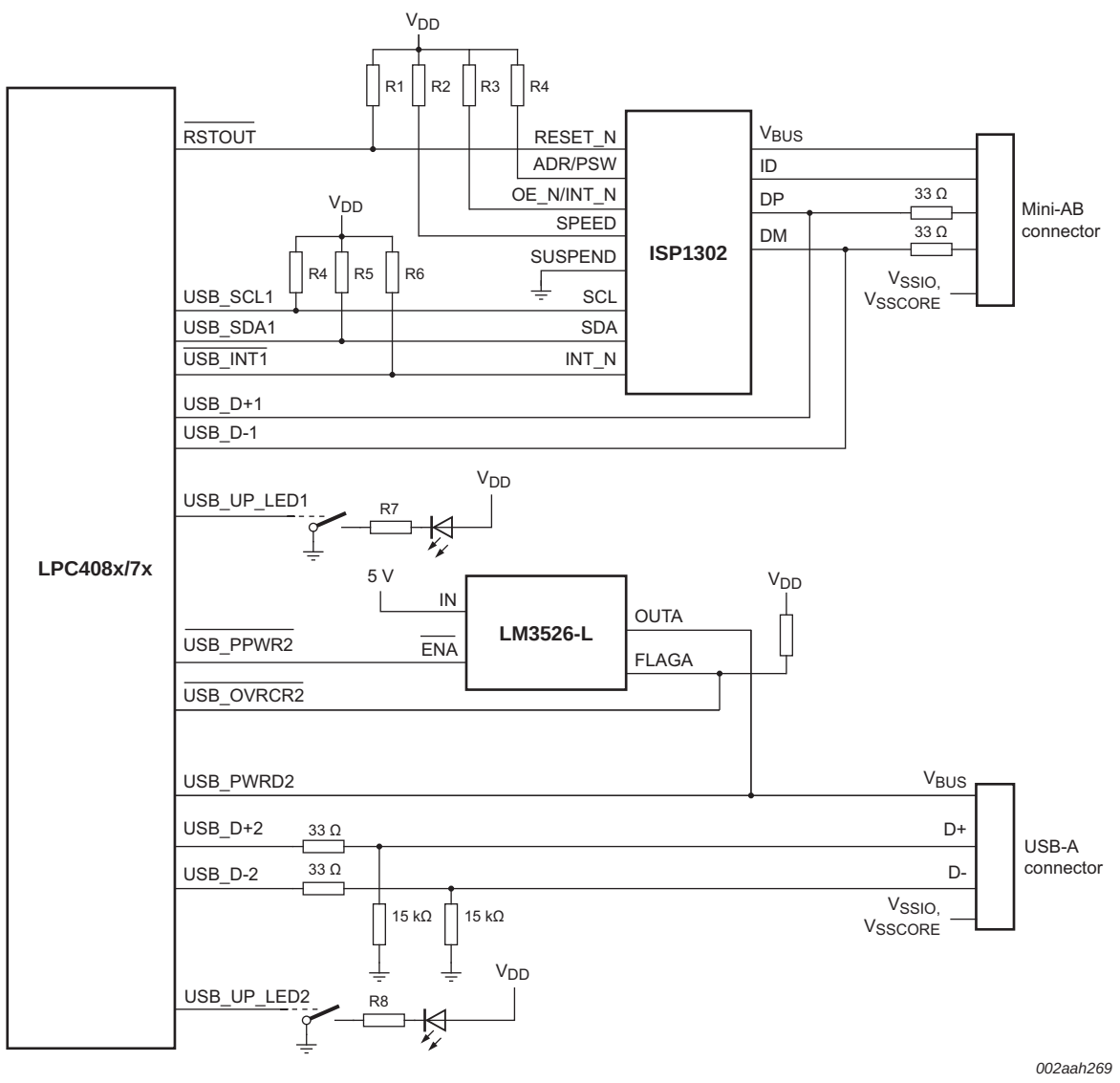

Fig 36. USB OTG port configuration: port 1 OTG dual-role device, port 2 host

All information provided in this document is subject to legal disclaimers.

© NXP Semiconductors N.V. 2017. All rights reserved.

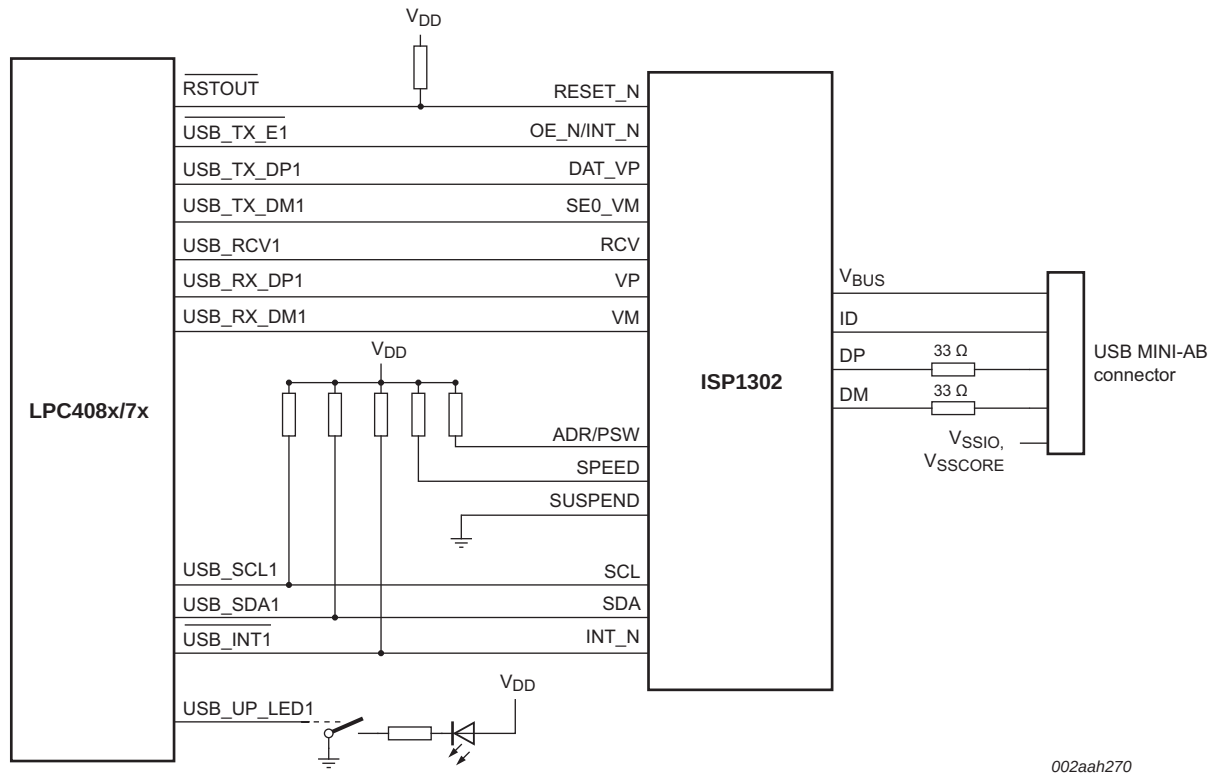

Fig 37. USB OTG port configuration: VP_VM mode

All information provided in this document is subject to legal disclaimers.

© NXP Semiconductors N.V. 2017. All rights reserved.

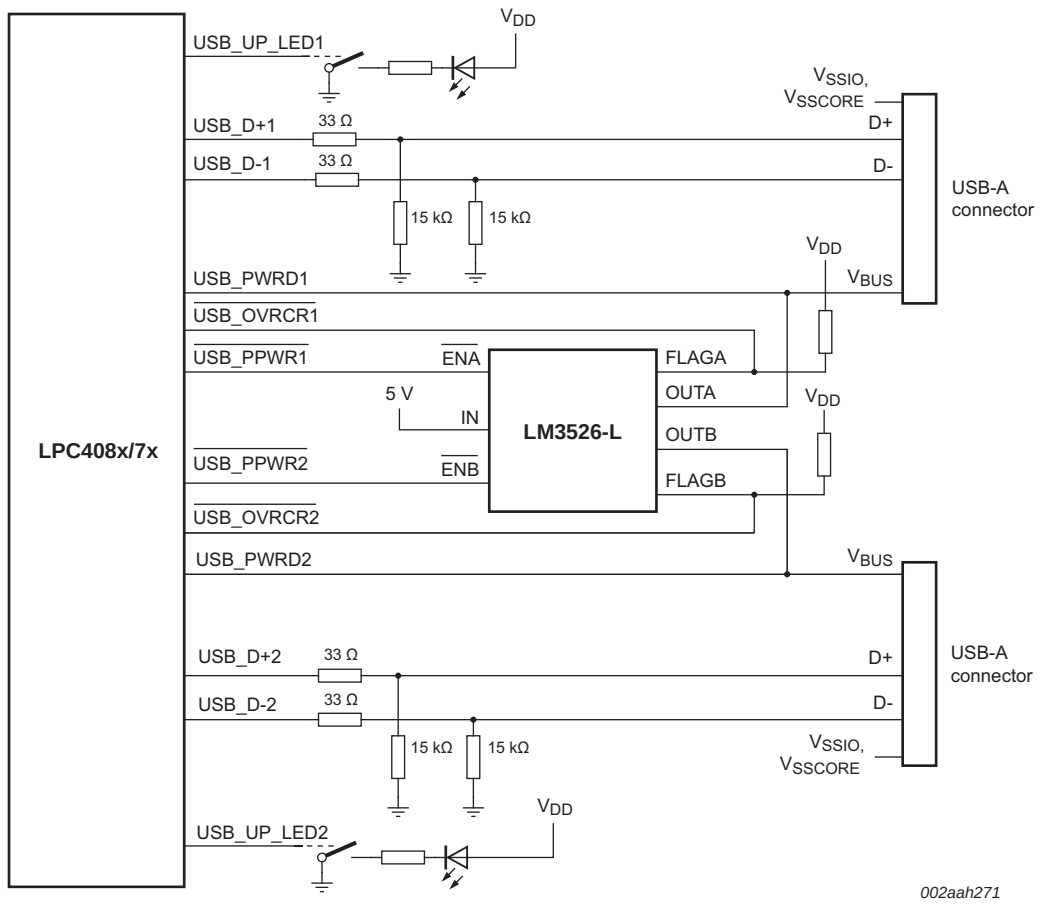

Fig 38. USB host port configuration: port 1 and port 2 as hosts

All information provided in this document is subject to legal disclaimers.

© NXP Semiconductors N.V. 2017. All rights reserved.

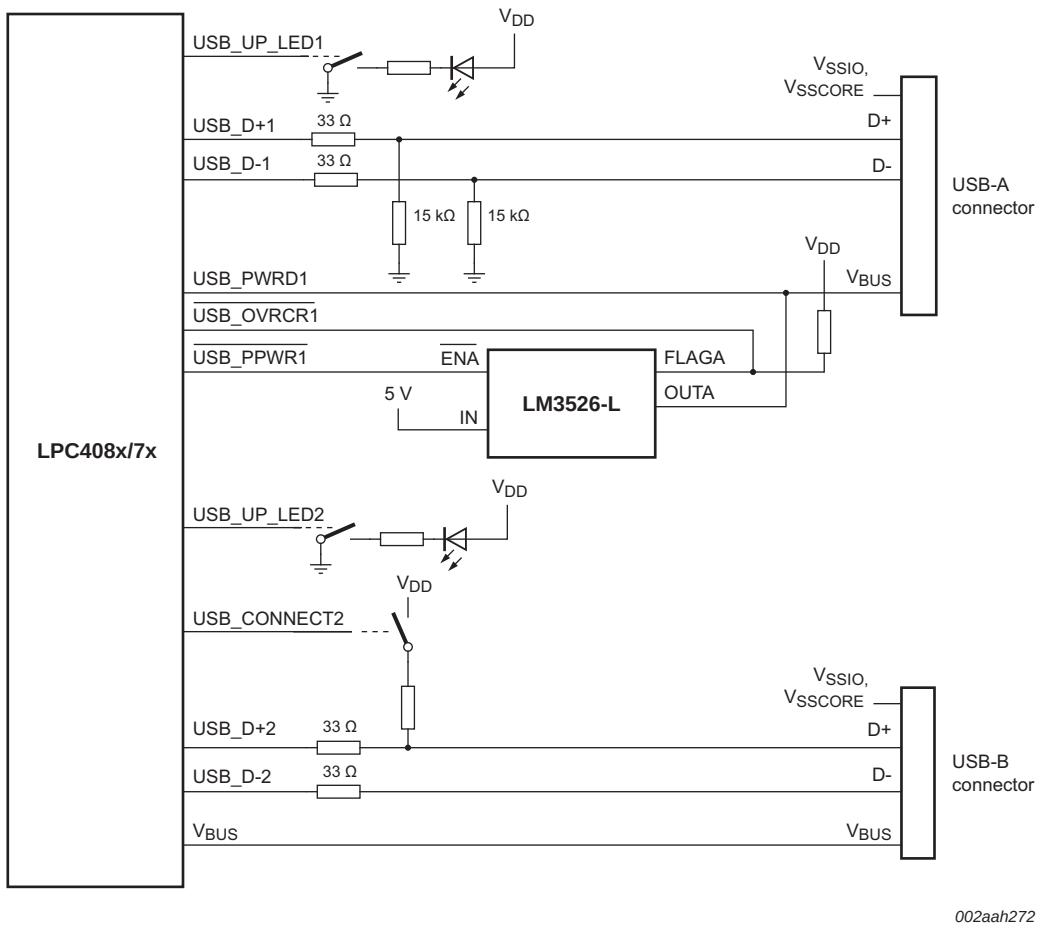

Fig 39. USB device port configuration: port 1 host and port 2 device

13.2 Crystal oscillator XTAL input and component selection

The input voltage to the on-chip oscillators is limited to 1.8 V. If the oscillator is driven by a clock in slave mode, it is recommended that the input be coupled through a capacitor with C_i = 100 pF. To limit the input voltage to the specified range, choose an additional capacitor to ground C_g which attenuates the input voltage by a factor $C_i/(C_i + C_g)$. In slave mode, a minimum of 200 mV(RMS) is needed.

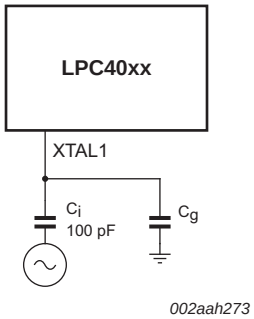

Fig 40. Slave mode operation of the on-chip oscillator

All information provided in this document is subject to legal disclaimers.

© NXP Semiconductors N.V. 2017. All rights reserved.

In slave mode the input clock signal should be coupled by means of a capacitor of 100 pF (Figure 40), with an amplitude between 200 mV(RMS) and 1000 mV(RMS). This corresponds to a square wave signal with a signal swing of between 280 mV and 1.4 V. The XTALOUT pin in this configuration can be left unconnected.

External components and models used in oscillation mode are shown in Figure 41 and in Table 34 and Table 35. Since the feedback resistance is integrated on chip, only a crystal and the capacitances C_{X1} and C_{X2} need to be connected externally in case of fundamental mode oscillation (the fundamental frequency is represented by L, C_L and R_S). Capacitance C_P in Figure 41 represents the parallel package capacitance and should not be larger than 7 pF. Parameters F_{OSC}, C_L, R_S and C_P are supplied by the crystal manufacturer.

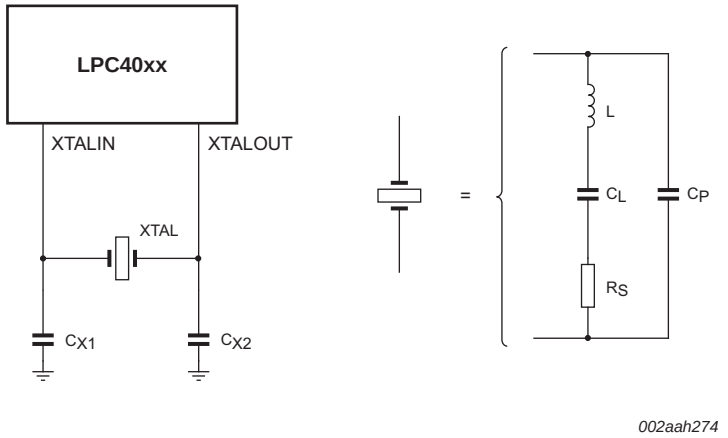

Fig 41. Oscillator modes and models: oscillation mode of operation and external crystal model used for C_{X1}/C_{X2} evaluation

Table 34. Recommended values for C_{X1}/C_{X2} in oscillation mode (crystal and external components parameters): low frequency mode

Fundamental oscillation frequency F_{OSC}	Crystal load capacitance C_L	Maximum crystal series resistance R_S	External load capacitors C_{X1}/C_{X2}
1 MHz to 5 MHz	10 pF	< 300 Ω	18 pF, 18 pF
	20 pF	< 300 Ω	39 pF, 39 pF
	30 pF	< 300 Ω	57 pF, 57 pF
5 MHz to 10 MHz	10 pF	< 300 Ω	18 pF, 18 pF
	20 pF	< 200 Ω	39 pF, 39 pF
	30 pF	< 100 Ω	57 pF, 57 pF
10 MHz to 15 MHz	10 pF	< 160 Ω	18 pF, 18 pF
	20 pF	< 60 Ω	39 pF, 39 pF
15 MHz to 20 MHz	10 pF	< 80 Ω	18 pF, 18 pF

All information provided in this document is subject to legal disclaimers.

© NXP Semiconductors N.V. 2017. All rights reserved.

Table 35. Recommended values for C_{X1}/C_{X2} in oscillation mode (crystal and external components parameters): high frequency mode

Fundamental oscillation frequency F_{OSC}	Crystal load capacitance C_L	Maximum crystal series resistance R_S	External load capacitors C_{X1}, C_{X2}
15 MHz to 20 MHz	10 pF	< 180 Ω	18 pF, 18 pF
	20 pF	< 100 Ω	39 pF, 39 pF
20 MHz to 25 MHz	10 pF	< 160 Ω	18 pF, 18 pF
	20 pF	< 80 Ω	39 pF, 39 pF

13.3 XTAL Printed-Circuit Board (PCB) layout guidelines

The crystal should be connected on the PCB as close as possible to the oscillator input and output pins of the chip. Take care that the load capacitors C_{x1}, C_{x2}, and C_{x3} in case of third overtone crystal usage have a common ground plane. The external components must also be connected to the ground plane. Loops must be made as small as possible in order to keep the noise coupled in via the PCB as small as possible. Also parasitics should stay as small as possible. Smaller values of C_{x1} and C_{x2} should be chosen according to the increase in parasitics of the PCB layout.

13.4 Standard I/O pin configuration

Figure 42 shows the possible pin modes for standard I/O pins with analog input function:

- Digital output driver: Open-drain mode enabled/disabled.
- Digital input: Pull-up enabled/disabled.
- Digital input: Pull-down enabled/disabled.
- Digital input: Repeater mode enabled/disabled.
- Analog input.

The default configuration for standard I/O pins is input with pull-up enabled. The weak MOS devices provide a drive capability equivalent to pull-up and pull-down resistors.

All information provided in this document is subject to legal disclaimers.

© NXP Semiconductors N.V. 2017. All rights reserved.

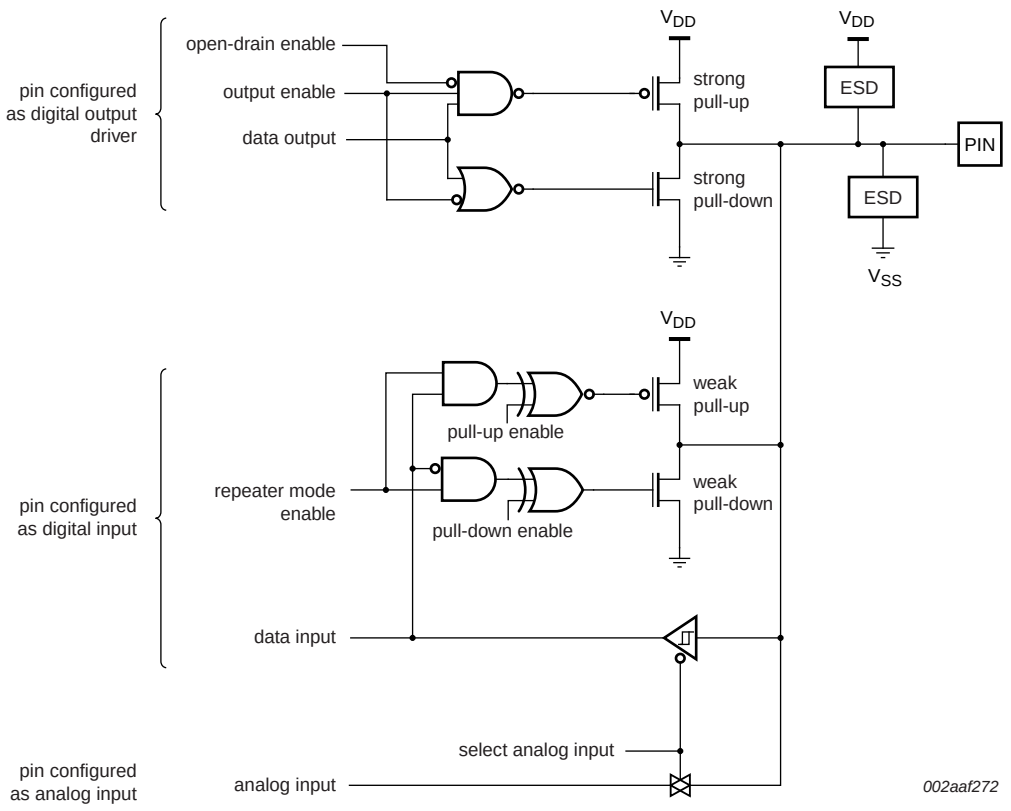

Fig 42. Standard I/O pin configuration with analog input

13.5 Reset pin configuration

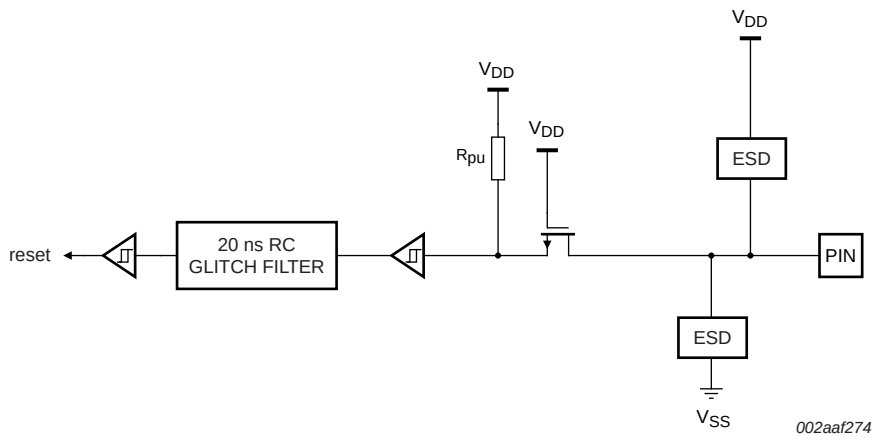

Fig 43. Reset pin configuration

13.6 Reset pin configuration for RTC operation

Under certain circumstances, the RTC may temporarily pause and lose fractions of a second during the rising and falling edges of the $\overline{\text{RESET}}$ signal.

All information provided in this document is subject to legal disclaimers.

© NXP Semiconductors N.V. 2017. All rights reserved.

To eliminate the loss of time counts in the RTC due to voltage swing or ramp rate of the $\overline{\text{RESET}}$ signal, connect an RC filter between the $\overline{\text{RESET}}$ pin and the external reset input.

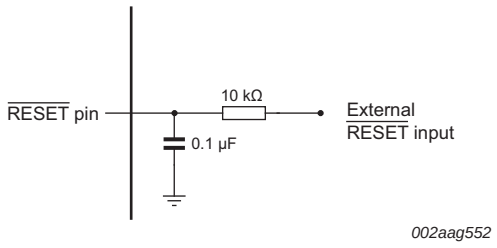

Fig 44. Reset input with RC filter

All information provided in this document is subject to legal disclaimers.

© NXP Semiconductors N.V. 2017. All rights reserved.

14. Package outline

LQFP208; plastic low profile quad flat package; 208 leads; body 28 x 28 x 1.4 mm **SOT459-1**

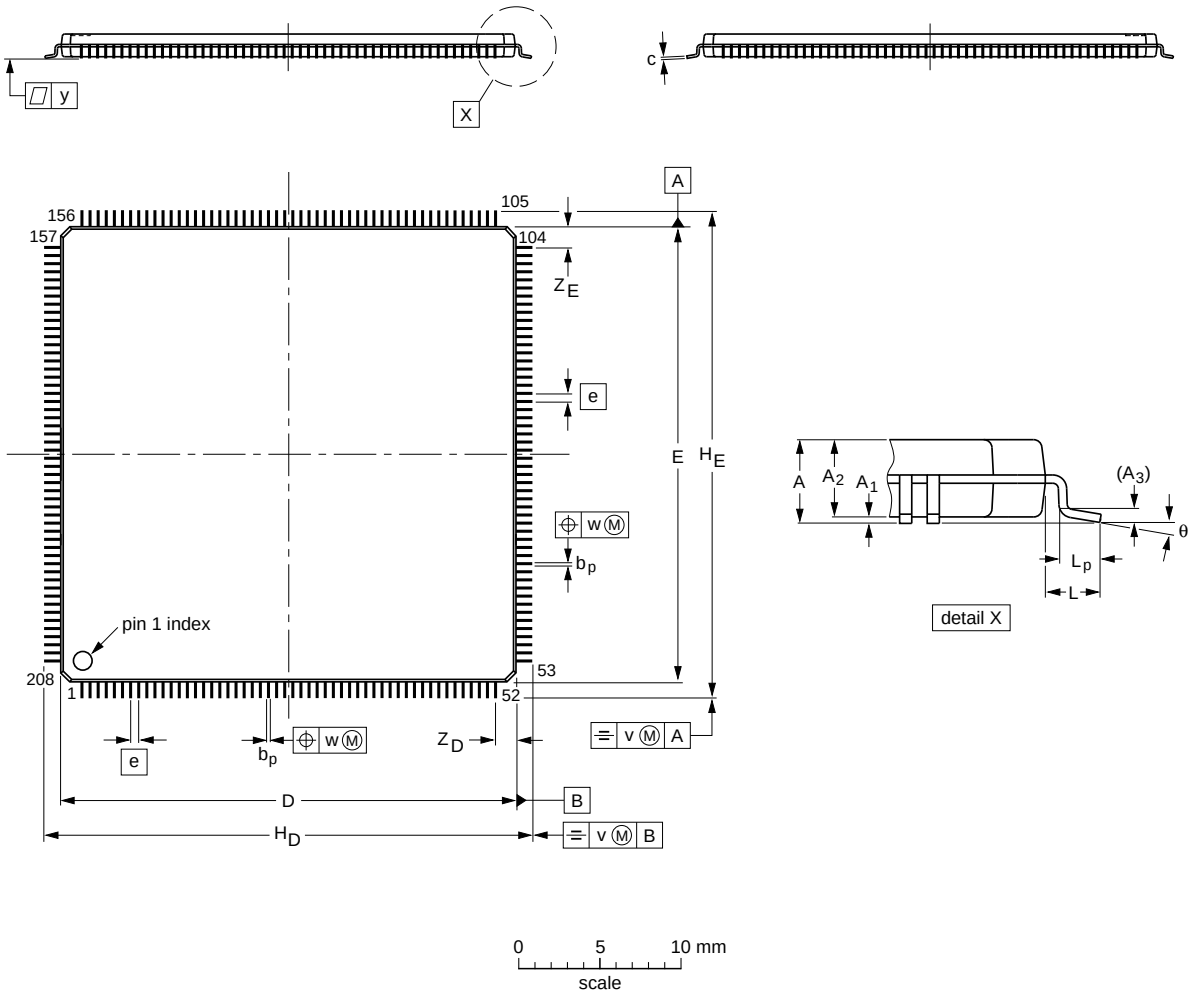

DIMENSIONS (mm are the original dimensions)

UNIT	A max.	A_1	A_2	A_3	b_p	c	D(1)	E(1)	e	H_D	H_E	L	L_p	v	w	y	Z_D	Z_E	θ
mm	1.6	0.15 0.05	1.45 1.35	0.25	0.27 0.17	0.20 0.09	28.1 27.9	28.1 27.9	0.5	30.15 29.85	30.15 29.85	1	0.75 0.45	0.12	0.08	0.08	1.43 1.08	1.43 1.08	7° 0°

Note

1. Plastic or metal protrusions of 0.25 mm maximum per side are not included.

OUTLINE VERSION	REFERENCES				EUROPEAN PROJECTION	ISSUE DATE
	IEC	JEDEC	JEITA			
SOT459-1	136E30	MS-026				~~00-02-06~~ 03-02-20

Fig 45. Package outline SOT459-1 (LQFP208)

All information provided in this document is subject to legal disclaimers.

© NXP Semiconductors N.V. 2017. All rights reserved.

TFBGA208: plastic thin fine-pitch ball grid array package; 208 balls; body 15 x 15 x 0.7 mm **SOT950-1**

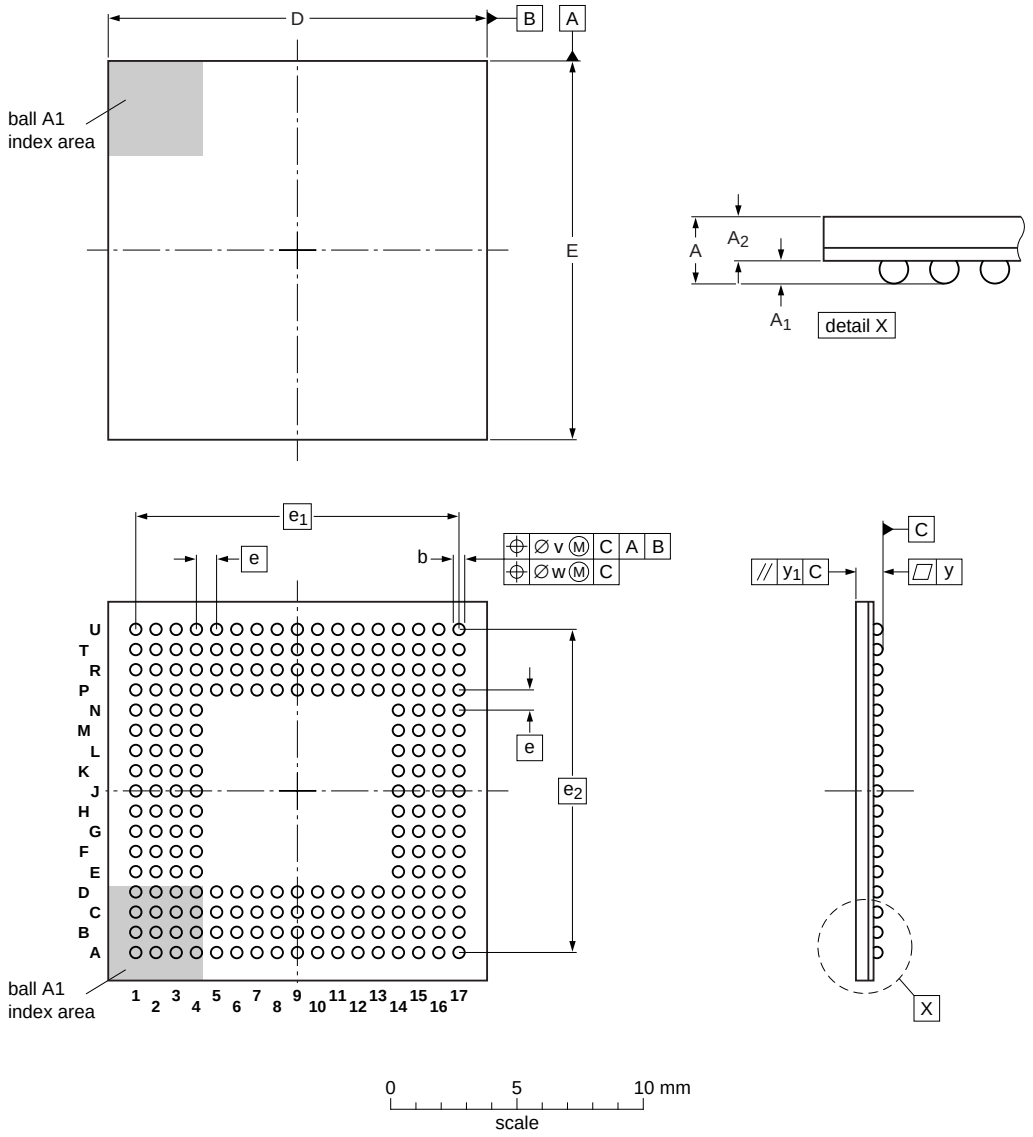

DIMENSIONS (mm are the original dimensions)

UNIT	A max	A_1	A_2	b	D	E	e	e_1	e_2	v	w	y	y_1
mm	1.2	0.4 0.3	0.8 0.6	0.5 0.4	15.1 14.9	15.1 14.9	0.8	12.8	12.8	0.15	0.08	0.12	0.1

OUTLINE VERSION	REFERENCES				EUROPEAN PROJECTION	ISSUE DATE
	IEC	JEDEC	JEITA			
SOT950-1		- - -				~~06-06-01~~ 06-06-14

Fig 46. Package outline SOT950-1 (TFBGA208)

All information provided in this document is subject to legal disclaimers.

© NXP Semiconductors N.V. 2017. All rights reserved.

TFBGA180: thin fine-pitch ball grid array package; 180 balls **SOT570-3**

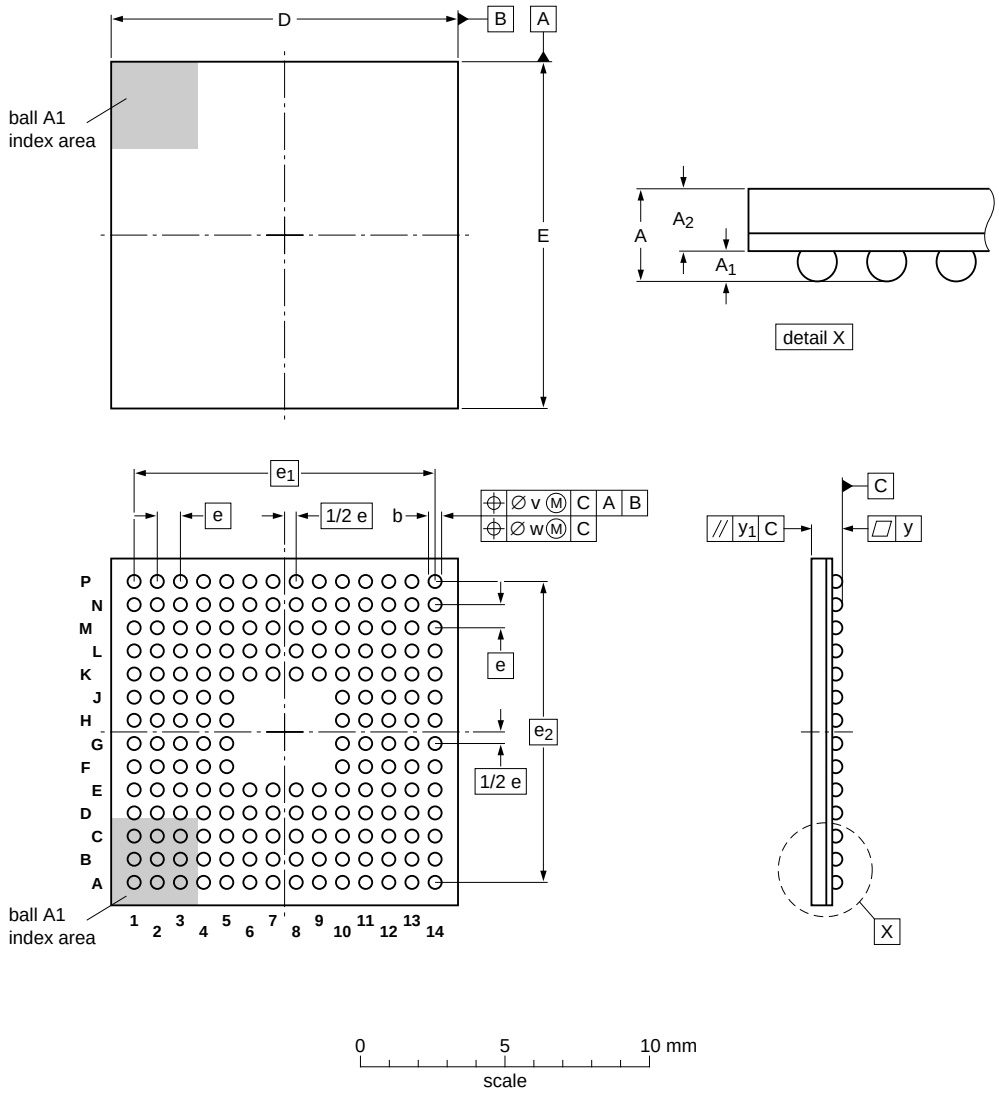

DIMENSIONS (mm are the original dimensions)

UNIT		A	A_1	A_2	b	D	E	e	e_1	e_2	v	w	y	y_1
mm	max	1.20	0.40	0.80	0.50	12.1	12.1							
	nom	1.06	0.35	0.71	0.45	12.0	12.0	0.8	10.4	10.4	0.15	0.05	0.12	0.1
	min	0.95	0.30	0.65	0.40	11.9	11.9							

OUTLINE VERSION	REFERENCES				EUROPEAN PROJECTION	ISSUE DATE
	IEC	JEDEC	JEITA			
SOT570-3						~~08-07-09~~ 10-04-15

Fig 47. Package outline SOT570-3 (TFBGA180)

All information provided in this document is subject to legal disclaimers.

© NXP Semiconductors N.V. 2017. All rights reserved.

LQFP144: plastic low profile quad flat package; 144 leads; body 20 x 20 x 1.4 mm **SOT486-1**

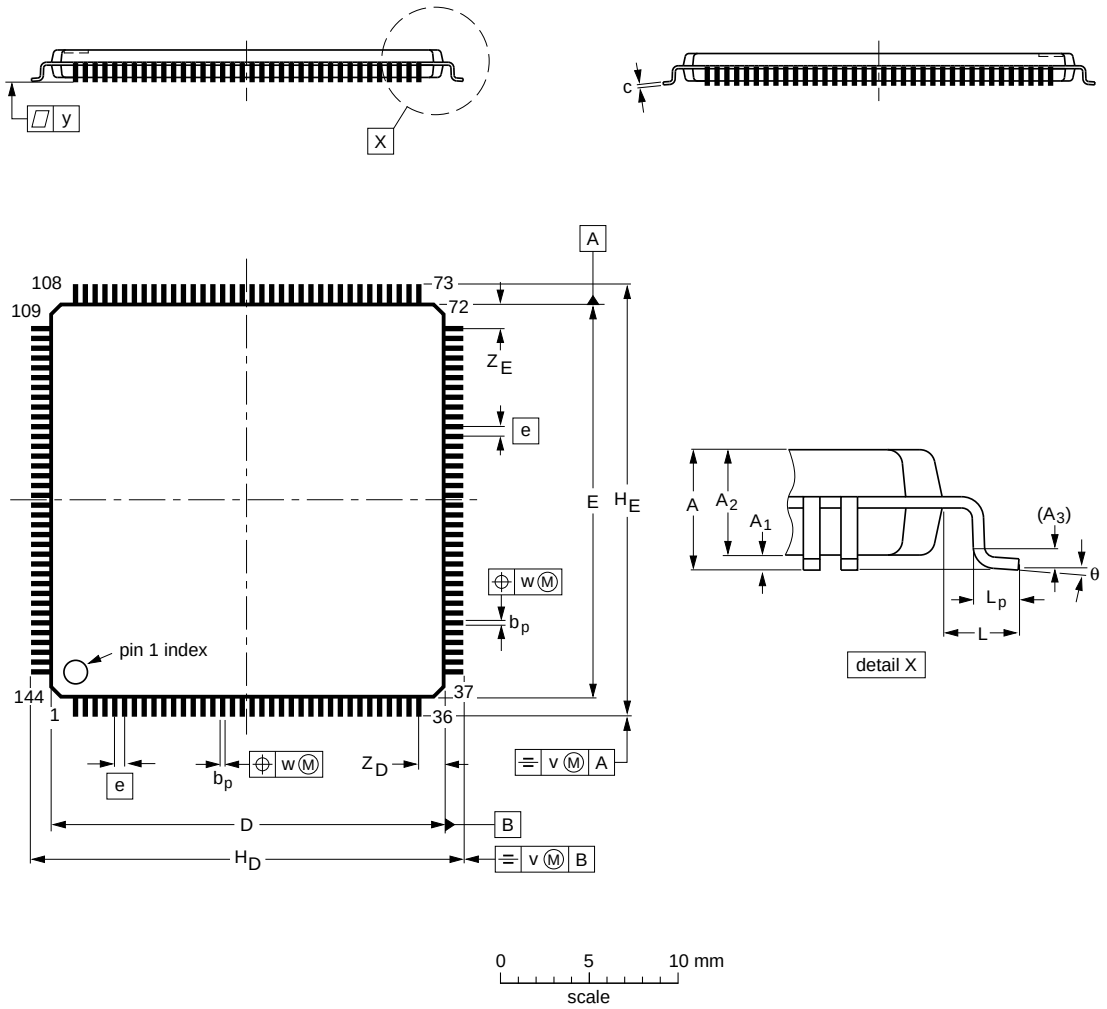

DIMENSIONS (mm are the original dimensions)

UNIT	A max.	A_1	A_2	A_3	b_p	c	D(1)	E(1)	e	H_D	H_E	L	L_p	v	w	y	Z_D(1)	Z_E(1)	θ
mm	1.6	0.15 0.05	1.45 1.35	0.25	0.27 0.17	0.20 0.09	20.1 19.9	20.1 19.9	0.5	22.15 21.85	22.15 21.85	1	0.75 0.45	0.2	0.08	0.08	1.4 1.1	1.4 1.1	7° 0°

Note

1. Plastic or metal protrusions of 0.25 mm maximum per side are not included.

OUTLINE VERSION	REFERENCES				EUROPEAN PROJECTION	ISSUE DATE
	IEC	JEDEC	JEITA			
SOT486-1	136E23	MS-026				~~00-03-14~~ 03-02-20

Fig 48. Package outline SOT486-1 (LQFP144)

All information provided in this document is subject to legal disclaimers.

© NXP Semiconductors N.V. 2017. All rights reserved.

LQFP100: plastic low profile quad flat package; 100 leads; body 14 x 14 x 1.4 mm **SOT407-1**

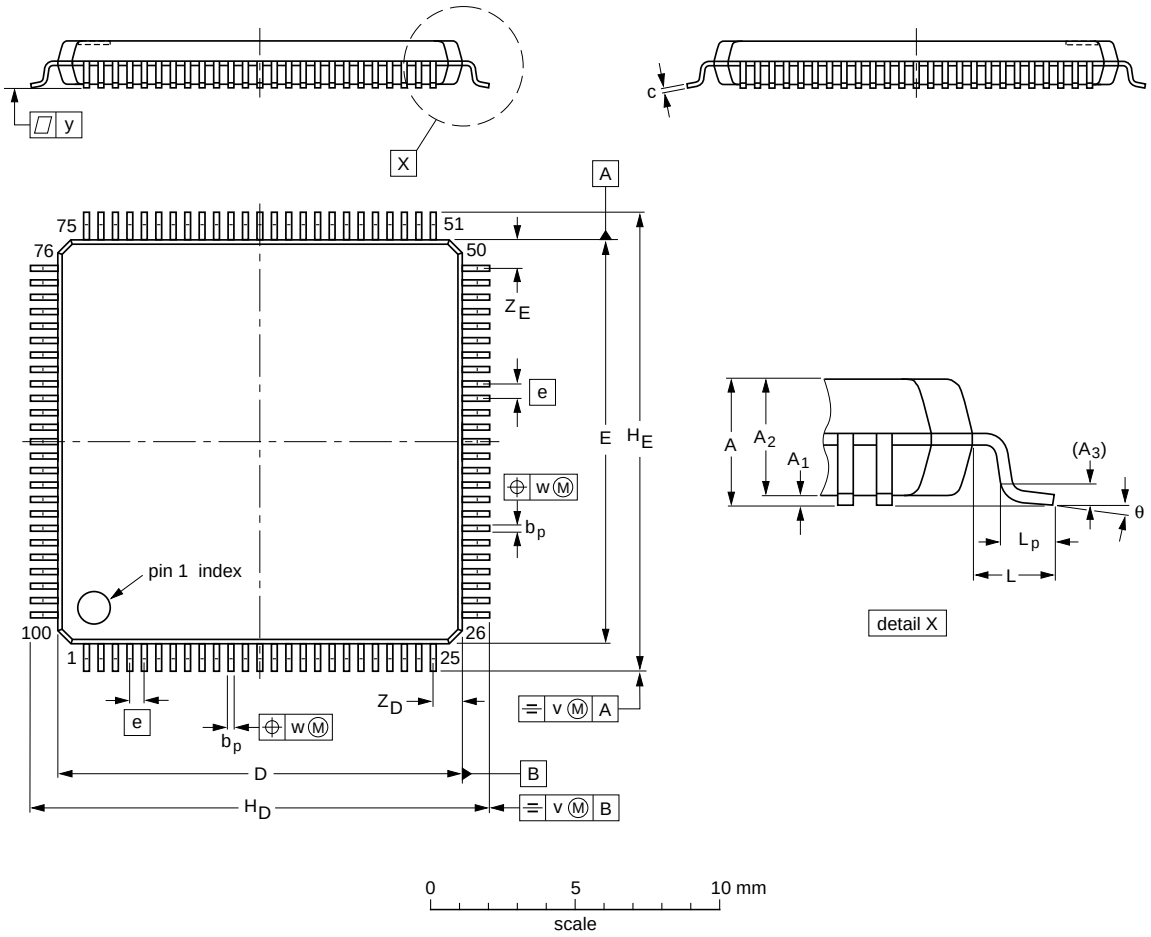

DIMENSIONS (mm are the original dimensions)

UNIT	A max.	A_1	A_2	A_3	b_p	c	D(1)	E(1)	e	H_D	H_E	L	L_p	v	w	y	Z_D(1)	Z_E(1)	θ
mm	1.6	0.15 0.05	1.45 1.35	0.25	0.27 0.17	0.20 0.09	14.1 13.9	14.1 13.9	0.5	16.25 15.75	16.25 15.75	1	0.75 0.45	0.2	0.08	0.08	1.15 0.85	1.15 0.85	7° 0°

Note

1. Plastic or metal protrusions of 0.25 mm maximum per side are not included.

OUTLINE VERSION	REFERENCES				EUROPEAN PROJECTION	ISSUE DATE
	IEC	JEDEC	JEITA			
SOT407-1	136E20	MS-026				~~00-02-01~~ 03-02-20

Fig 49. Package outline SOT407-1 (LQFP100)

All information provided in this document is subject to legal disclaimers.

© NXP Semiconductors N.V. 2017. All rights reserved.

LQFP80: plastic low profile quad flat package; 80 leads; body 12 x 12 x 1.4 mm **SOT315-1**

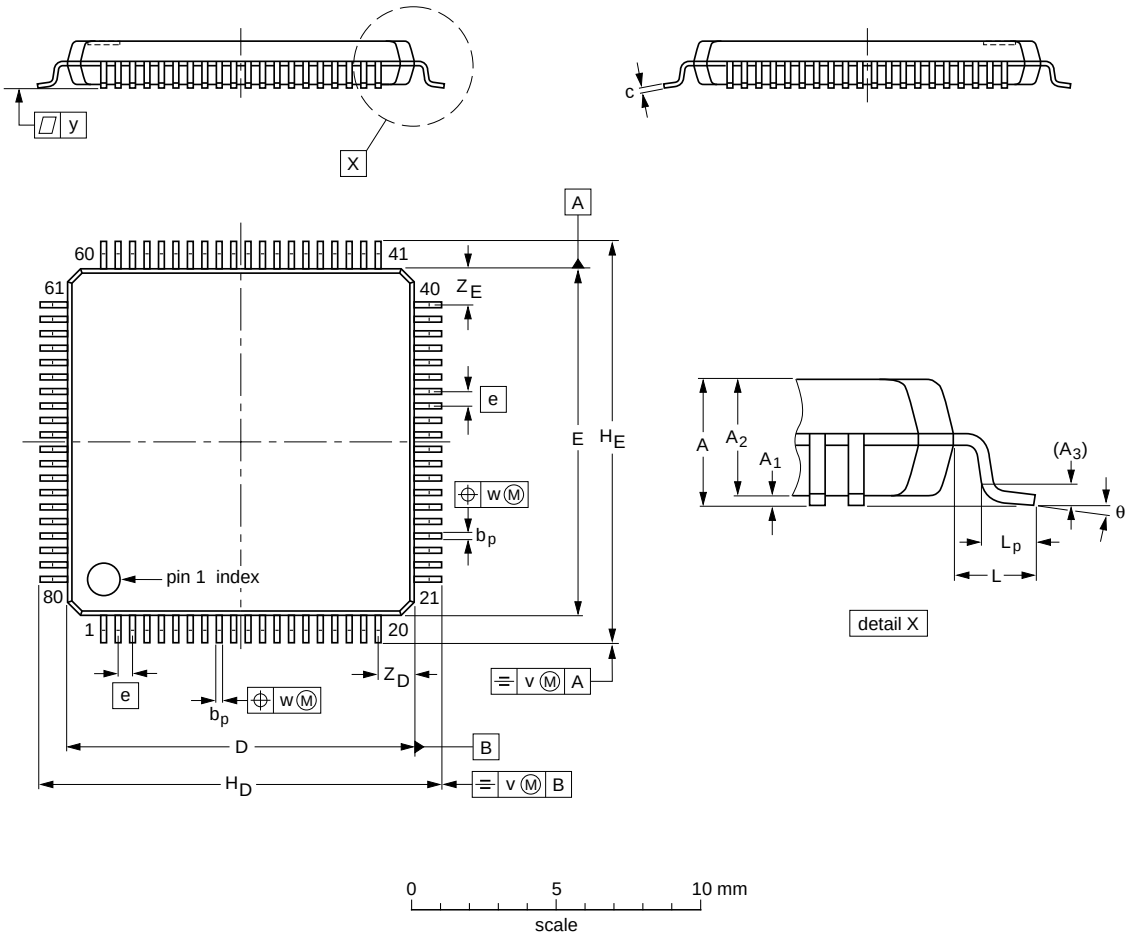

DIMENSIONS (mm are the original dimensions)

UNIT	A max.	A_1	A_2	A_3	b_p	c	D(1)	E(1)	e	H_D	H_E	L	L_p	v	w	y	Z_D(1)	Z_E(1)	θ
mm	1.6	0.16 0.04	1.5 1.3	0.25	0.27 0.13	0.18 0.12	12.1 11.9	12.1 11.9	0.5	14.15 13.85	14.15 13.85	1	0.75 0.30	0.2	0.15	0.1	1.45 1.05	1.45 1.05	7° 0°

Note

1. Plastic or metal protrusions of 0.25 mm maximum per side are not included.

OUTLINE VERSION	REFERENCES				EUROPEAN PROJECTION	ISSUE DATE
	IEC	JEDEC	JEITA			
SOT315-1	136E15	MS-026				~~00-01-19~~ 03-02-25

Fig 50. Package outline SOT315-1 (LQFP80)

All information provided in this document is subject to legal disclaimers.

© NXP Semiconductors N.V. 2017. All rights reserved.

TFBGA80: plastic thin fine-pitch ball grid array package; 80 balls **SOT1328-1**

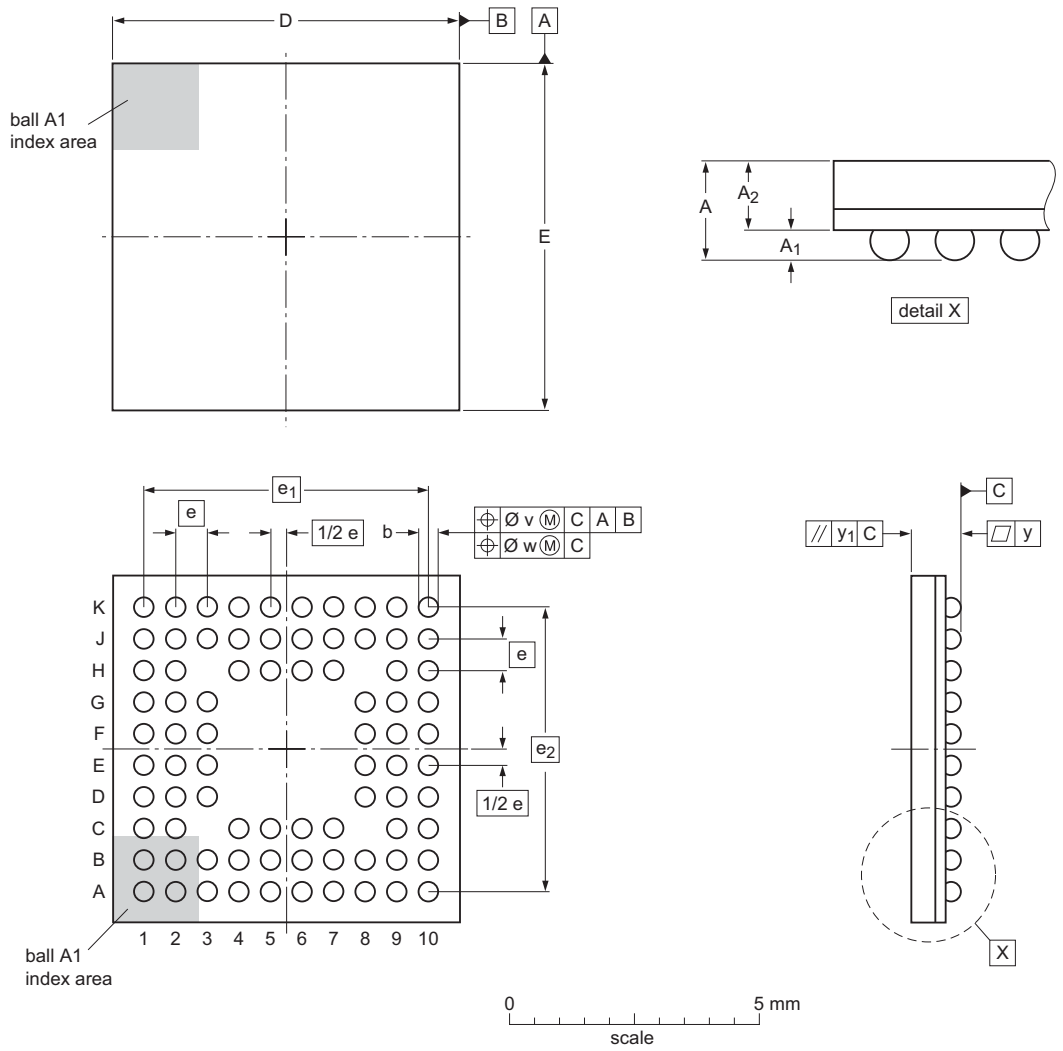

Dimensions (mm are the original dimensions)

Unit		A	A_1	A_2	b	D	E	e	e_1	e_2	v	w	y	y_1
mm	max	1.15	0.35	0.80	0.45	7.1	7.1							
	nom	1.00	0.30	0.70	0.40	7.0	7.0	0.65	5.85	5.85	0.15	0.05	0.08	0.1
	min	0.90	0.25	0.65	0.35	6.9	6.9							

sot1328-1_po

Outline version	References				European projection	Issue date
	IEC	JEDEC	JEITA			
SOT1328-1						~~12-05-07~~ 12-06-14

Fig 51. Package outline SOT1328-1 (TFBGA80)

All information provided in this document is subject to legal disclaimers.

© NXP Semiconductors N.V. 2017. All rights reserved.

15. Soldering

Footprint information for reflow soldering of LQFP208 package **SOT459-1**

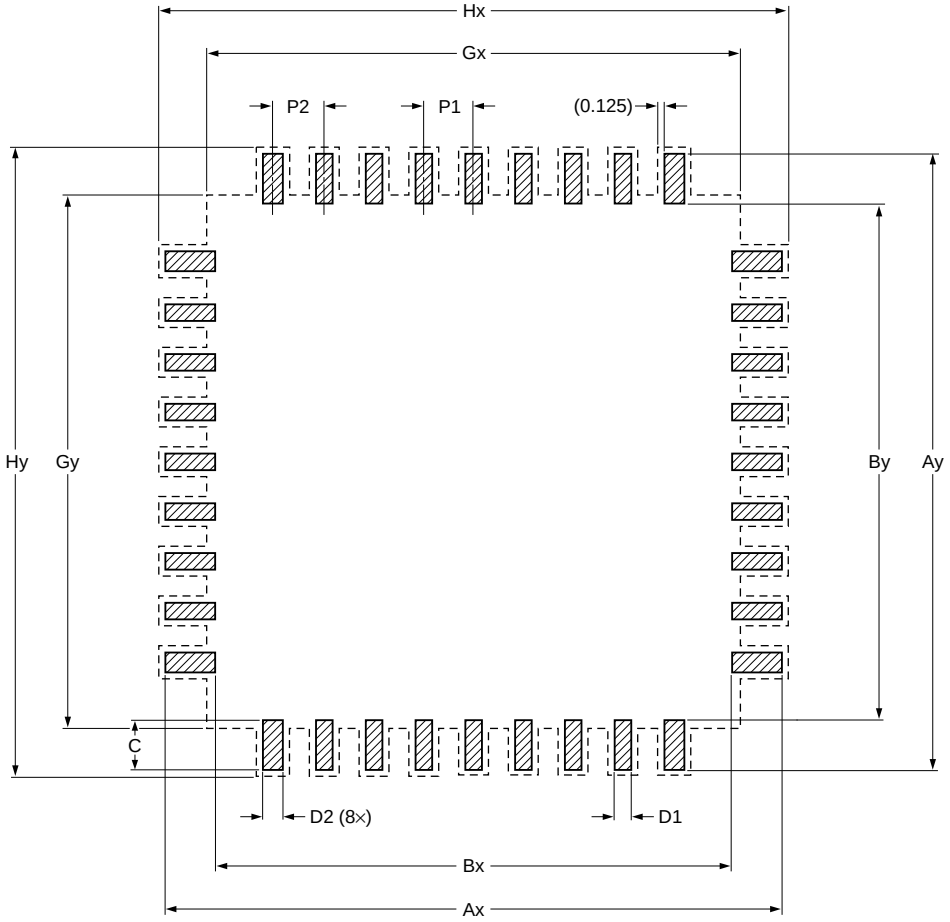

Generic footprint pattern

Refer to the package outline drawing for actual layout

solder land

occupied area

DIMENSIONS in mm

P1	P2	Ax	Ay	Bx	By	C	D1	D2	Gx	Gy	Hx	Hy
0.500	0.560	31.300	31.300	28.300	28.300	1.500	0.280	0.400	28.500	28.500	31.550	31.550

sot459-1_fr

Fig 52. Reflow soldering of the LQFP208 package

All information provided in this document is subject to legal disclaimers.

© NXP Semiconductors N.V. 2017. All rights reserved.

Footprint information for reflow soldering of TFBGA180 package **SOT570-3**

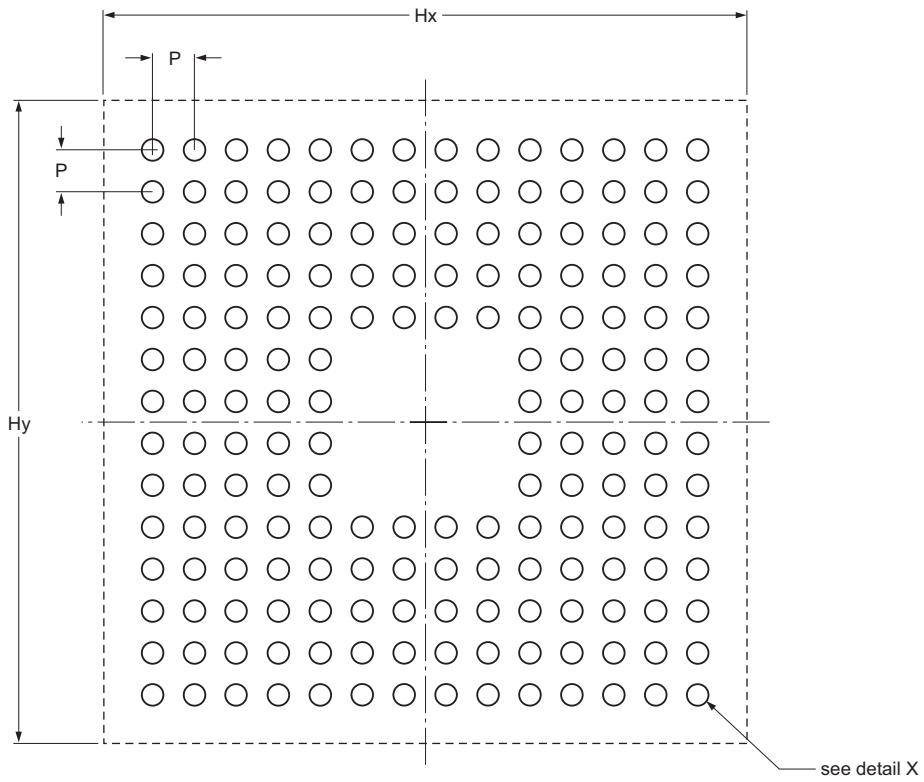

solder land (SL)

solder paste deposit (SP)

solder land plus solder paste

solder resist opening (SR)

occupied area

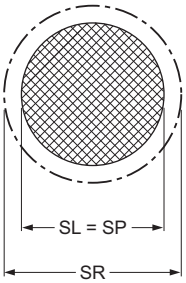

detail X

Dimensions in mm

P	SL	SP	SR	Hx	Hy
0.80	0.40	0.40	0.50	12.30	12.30

Issue date ~~14-01-30~~ 15-08-27

Recommend stencil thickness: 0.1 mm

sot570-3_fr

Fig 53. Reflow soldering of the TFBGA180 package

All information provided in this document is subject to legal disclaimers.

© NXP Semiconductors N.V. 2017. All rights reserved.

Footprint information for reflow soldering of LQFP144 package **SOT486-1**

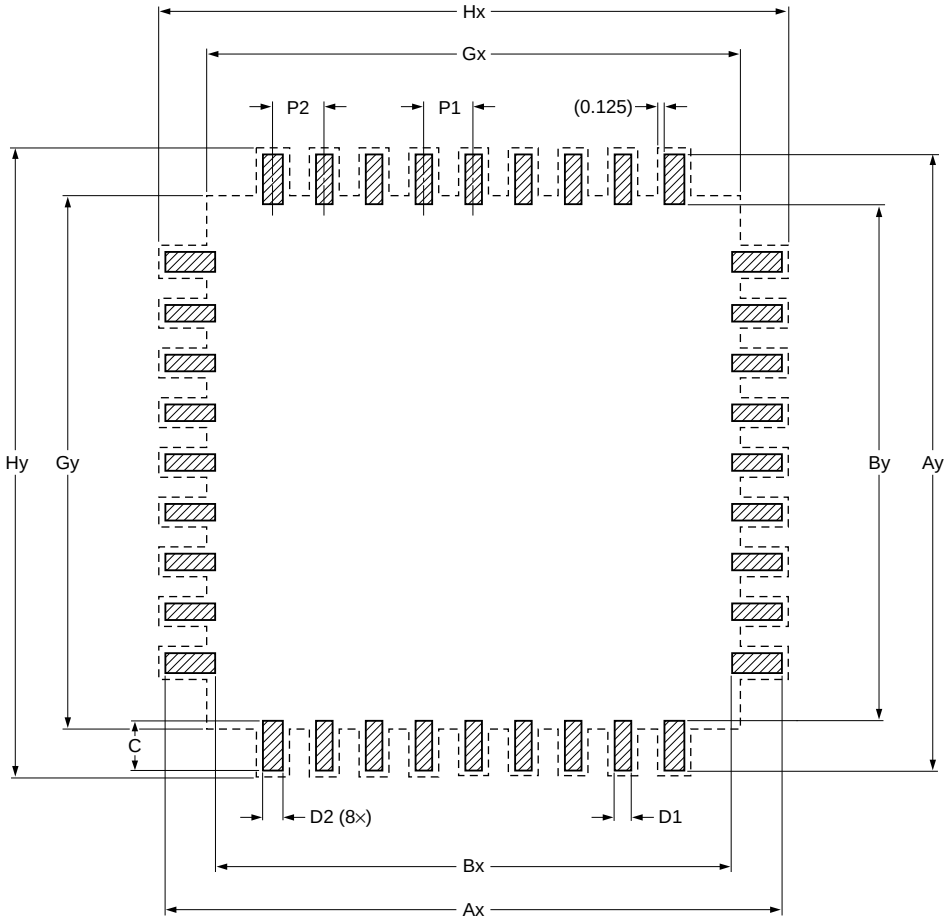

Generic footprint pattern

Refer to the package outline drawing for actual layout

solder land

occupied area

DIMENSIONS in mm

P1	P2	Ax	Ay	Bx	By	C	D1	D2	Gx	Gy	Hx	Hy
0.500	0.560	23.300	23.300	20.300	20.300	1.500	0.280	0.400	20.500	20.500	23.550	23.550

sot486-1_fr

Fig 54. Reflow soldering of the LQFP144 package

All information provided in this document is subject to legal disclaimers.

© NXP Semiconductors N.V. 2017. All rights reserved.

Footprint information for reflow soldering of LQFP100 package **SOT407-1**

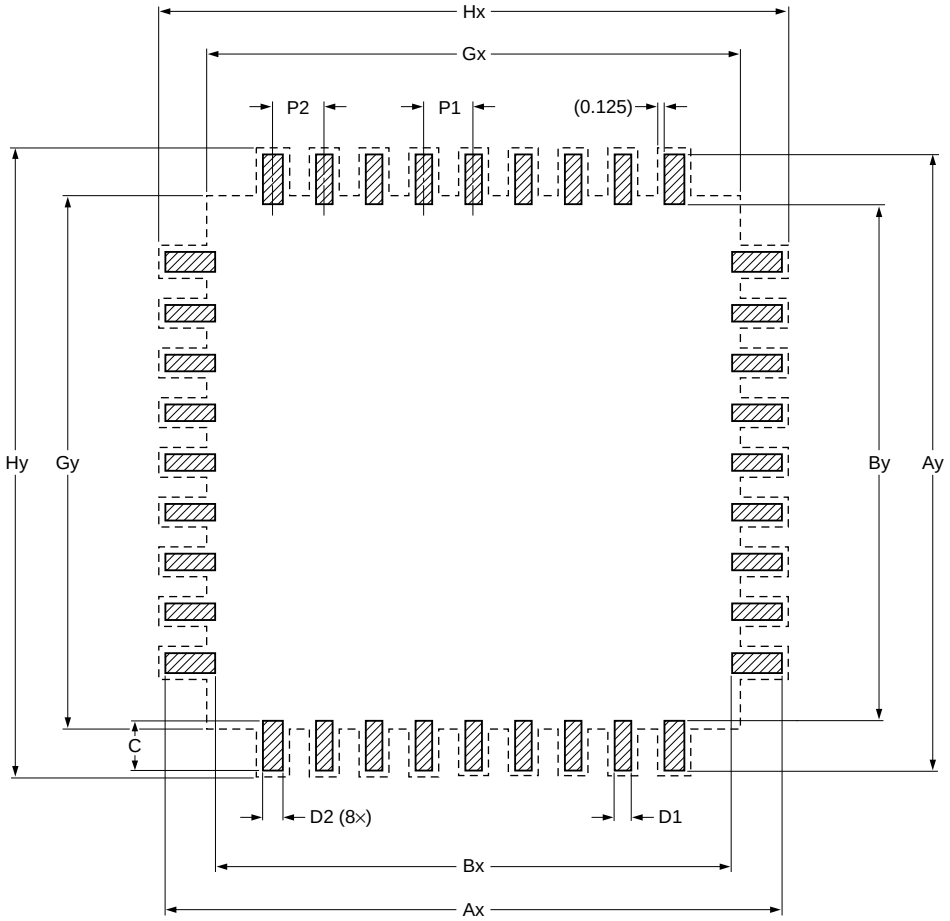

Generic footprint pattern

Refer to the package outline drawing for actual layout

solder land

occupied area

DIMENSIONS in mm

P1	P2	Ax	Ay	Bx	By	C	D1	D2	Gx	Gy	Hx	Hy
0.500	0.560	17.300	17.300	14.300	14.300	1.500	0.280	0.400	14.500	14.500	17.550	17.550

sot407-1

Fig 55. Reflow soldering of the LQFP100 package

All information provided in this document is subject to legal disclaimers.

© NXP Semiconductors N.V. 2017. All rights reserved.

Footprint information for reflow soldering of LQFP80 package **SOT315-1**

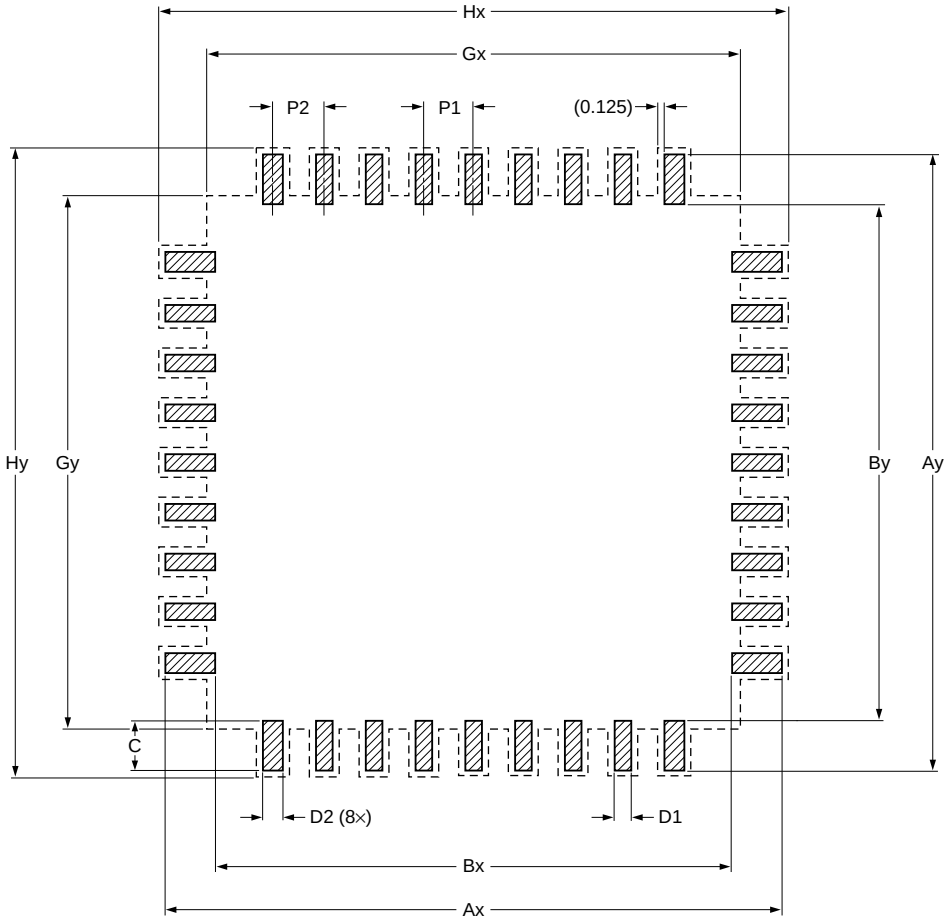

Generic footprint pattern

Refer to the package outline drawing for actual layout

solder land

occupied area

DIMENSIONS in mm

P1	P2	Ax	Ay	Bx	By	C	D1	D2	Gx	Gy	Hx	Hy
0.500	0.560	15.300	15.300	12.300	12.300	1.500	0.280	0.400	12.500	12.500	15.550	15.550

sot315-1_fr

Fig 56. Reflow soldering of the LQFP80 package

All information provided in this document is subject to legal disclaimers.

© NXP Semiconductors N.V. 2017. All rights reserved.

16. Abbreviations

Table 36. Abbreviations

Acronym	Description
ADC	Analog-to-Digital Converter
AHB	Advanced High-performance Bus
AMBA	Advanced Microcontroller Bus Architecture
APB	Advanced Peripheral Bus
BOD	BrownOut Detection
CAN	Controller Area Network
DAC	Digital-to-Analog Converter
DMA	Direct Memory Access
EOP	End Of Packet
ETM	Embedded Trace Macrocell
GPIO	General Purpose Input/Output
GPS	Global Positioning System
HVAC	Heating, Venting, and Air Conditioning
IRC	Internal RC
IrDA	Infrared Data Association
JTAG	Joint Test Action Group
MAC	Media Access Control
MIIM	Media Independent Interface Management
OHCI	Open Host Controller Interface
OTG	On-The-Go
PHY	Physical Layer
PLC	Programmable Logic Controller
PLL	Phase-Locked Loop
PWM	Pulse Width Modulator
RMII	Reduced Media Independent Interface
SE0	Single Ended Zero
SPI	Serial Peripheral Interface
SSI	Serial Synchronous Interface
SSP	Synchronous Serial Port
TCM	Tightly Coupled Memory
TTL	Transistor-Transistor Logic
UART	Universal Asynchronous Receiver/Transmitter
USB	Universal Serial Bus

All information provided in this document is subject to legal disclaimers.

© NXP Semiconductors N.V. 2017. All rights reserved.

17. References

[1] LPC408x/7x User manual UM10562:
http://www.nxp.com/documents/user_manual/UM10562.pdf

[2] LPC407x/8x Errata sheet:
http://www.nxp.com/documents/errata_sheet/ES_LPC407X_8X.pdf

[3] Technical note ADC design guidelines:
http://www.nxp.com/documents/technical_note/TN00009.pdf

All information provided in this document is subject to legal disclaimers.

© NXP Semiconductors N.V. 2017. All rights reserved.

18. Revision history

Table 37. Revision history

Document ID	Release date	Data sheet status	Change notice	Supersedes
LPC408X_7X v.3.6	20170111	Product data sheet	-	LPC408X_7X v.3.5
Modifications:	• Updated Table 7 “Limiting values”: $V_{DD(3V3)}$ supply voltage (3.3 V) external rail and $V_{DD(REG)(3V3)}$ regulator supply voltage (3.3 V), min value is -0.5 V and max value is +4.6 V; was 2.4 V and 3.6 V.			
LPC408X_7X v.3.5	20160413	Product data sheet	-	LPC408X_7X v.3.4
Modifications:	• Updated Table 25 “Dynamic characteristics: LCD”: $t_{d(QV)}$ max value is 9 ns for accuracy; was 12 ns.			
LPC408X_7X v.3.4	20160321	Product data sheet	CIN 201603017I	LPC408X_7X v.3.3
Modifications:	• Updated Table 16 “Dynamic characteristics: Dynamic external memory interface, read strategy bits (RD bits) = 00”. • Updated Table 17 “Dynamic characteristics: Dynamic external memory interface, read strategy bits (RD bits) = 01”. • Updated Table 18 “Dynamic characteristics: Dynamic external memory interface programmable clock delays (CMDDLY, FBCLKDLY, CLKOUT0DLY and CLKOUT1DLY)”. • Updated Figure 22 “Dynamic external memory interface signal timing”.			
LPC408X_7X v.3.3	20151016	Product data sheet		LPC408X_7X v.3.2
Modifications:	• Corrected max value of $t_{v(Q)}$ (data output valid time) in SPI mode to $3*T_{cy(PCLK)}$ + 6.3 ns. Was: $3*T_{cy(PCLK)}$ + 2.5 ns. See Table 22 “Dynamic characteristics: SSP pins in SPI mode”.			
LPC408X_7X v.3.2	20150818	Product data sheet		LPC408X_7X v.3.1
Modifications:	• Updated max value of $t_{v(Q)}$ (data output valid time) in SPI mode to $3*T_{cy(PCLK)}$ + 2.5 ns. See Table 22 “Dynamic characteristics: SSP pins in SPI mode”. • Updated the ordering options table: Type number LPC4078FBD80, LQFP80 package does not support SD/MMC. See Table 2 “Ordering options”.			
LPC408X_7X v.3.1	20140901	Product data sheet	CIN 201404014I	LPC408X_7X v.3
Modifications:	• SPIFI timing diagram corrected and specified for mode 0. See Table 27. • Added values for power consumption on SPIFI. See Table 12. • Parameter $t_{su(D)}$ updated in Table 16 “Dynamic characteristics: Dynamic external memory interface, read strategy bits (RD bits) = 00”: Minimum value changed to (FBCLKDLY + 1) × 0.25 - 0.9. Maximum value removed. • ADC conversion rate in burst mode added to Table 28 “12-bit ADC characteristics”. • Removed max value from parameter $t_{h(D)}$ in Table 15. • Removed min value from parameter t_{deact} in Table 15.			

All information provided in this document is subject to legal disclaimers.

© NXP Semiconductors N.V. 2017. All rights reserved.

Table 37. Revision history *...continued*

Document ID	Release date	Data sheet status	Change notice	Supersedes
LPC408X_7X v.3	20140501	Product data sheet	CIN 201404014I	LPC408X_7X v.2
Modifications:	• Added TFBGA80 to features list. • Added Section 11.11 “SPIFI”. • Table 3: – Added function SSP2_SCK to pin P5[2]. – Added function SSP2_SSEL to pin P5[3]. – Updated pin description of STCLK. – 5 ns glitch filter changed to 10 ns for EINTx pins. – LQFP80 pin 12 changed from P2[30] to DNC. • Table 11: Added Table note 3 “VDDA and VREFP should be tied to VDD(3V3) if the ADC and DAC are not used.”. • Table 28: Added Table note 1 “VDDA and VREFP should be tied to VDD(3V3) if the ADC and DAC are not used.”. • Section 7.37.2 “Brownout detection”: Updated BOD interrupt and reset values. • Table 15: Added typical specs. • Table 16: – Added typical specs – Removed “All programmable delays EMCDLYCTL are bypassed” from table title. • Table 17: – Added typical specs – Removed “All programmable delays EMCDLYCTL are bypassed” from table title. • Table note 9 added in Table 28 “12-bit ADC characteristics”.			

All information provided in this document is subject to legal disclaimers.

© NXP Semiconductors N.V. 2017. All rights reserved.

Table 37. Revision history *...continued*

Document ID	Release date	Data sheet status	Change notice	Supersedes
LPC408X_7X v.2	20130703	Product data sheet	-	LPC408X_7X v.1.1
	• Added LQFP100 and TFBGA80. • Table 3: – Removed overbar from NMI. – Added minimum reset pulse width of 50 ns to $\overline{\text{RESET}}$ pin. – Updated Table note 14 for RTCX pins (32 kHz crystal must be used to operate RTC). – Added boundary scan information to description for $\overline{\text{RESET}}$ pin. • Table 11: – Updated typ numbers for $I_{DD(REG)(3V3)}$ and I_{BAT}. – Added max values for deep sleep, power down, and deep PD for I_{BAT}. • Table 15, Table note 3: Changed $T_{cy(clk)}$ = 1/CCLK to $T_{cy(clk)}$ = 1/EMC_CLK. • Table 21: Removed reference to $\overline{\text{RESET}}$ pin from Table note 1. • Table 22: – Removed $T_{cy(PCLK)}$ spec; already given by the maximum chip frequency. – Changed min clock cycle time for SSP slave from 120 to 100. – Updated Table note 1 and Table note 3. • Section 7.24.1 “Features”: Changed max speed for SSP master from 60 to 33. • Updated EMC timing specs to C_L = 30 pF in Table 15, Table 16, Table 17, and Table 18. • SOT570-2 obsolete; replaced with SOT570-3.			
LPC408X_7X v.1.1	20121114	Product data sheet	-	LPC408X_7X v.1
Modifications:	• Changed data sheet status to Product.			
LPC408X_7X v.1	20120917	Objective data sheet	-	-

All information provided in this document is subject to legal disclaimers.

© NXP Semiconductors N.V. 2017. All rights reserved.

19. Legal information

19.1 Data sheet status

Document status[1][2]	Product status[3]	Definition
Objective [short] data sheet	Development	This document contains data from the objective specification for product development.
Preliminary [short] data sheet	Qualification	This document contains data from the preliminary specification.
Product [short] data sheet	Production	This document contains the product specification.

[1] Please consult the most recently issued document before initiating or completing a design.

[2] The term 'short data sheet' is explained in section "Definitions".

[3] The product status of device(s) described in this document may have changed since this document was published and may differ in case of multiple devices. The latest product status information is available on the Internet at URL http://www.nxp.com.

19.2 Definitions

Draft — The document is a draft version only. The content is still under internal review and subject to formal approval, which may result in modifications or additions. NXP Semiconductors does not give any representations or warranties as to the accuracy or completeness of information included herein and shall have no liability for the consequences of use of such information.

Short data sheet — A short data sheet is an extract from a full data sheet with the same product type number(s) and title. A short data sheet is intended for quick reference only and should not be relied upon to contain detailed and full information. For detailed and full information see the relevant full data sheet, which is available on request via the local NXP Semiconductors sales office. In case of any inconsistency or conflict with the short data sheet, the full data sheet shall prevail.

Product specification — The information and data provided in a Product data sheet shall define the specification of the product as agreed between NXP Semiconductors and its customer, unless NXP Semiconductors and customer have explicitly agreed otherwise in writing. In no event however, shall an agreement be valid in which the NXP Semiconductors product is deemed to offer functions and qualities beyond those described in the Product data sheet.

19.3 Disclaimers

Limited warranty and liability — Information in this document is believed to be accurate and reliable. However, NXP Semiconductors does not give any representations or warranties, expressed or implied, as to the accuracy or completeness of such information and shall have no liability for the consequences of use of such information. NXP Semiconductors takes no responsibility for the content in this document if provided by an information source outside of NXP Semiconductors.

In no event shall NXP Semiconductors be liable for any indirect, incidental, punitive, special or consequential damages (including - without limitation - lost profits, lost savings, business interruption, costs related to the removal or replacement of any products or rework charges) whether or not such damages are based on tort (including negligence), warranty, breach of contract or any other legal theory.

Notwithstanding any damages that customer might incur for any reason whatsoever, NXP Semiconductors' aggregate and cumulative liability towards customer for the products described herein shall be limited in accordance with the *Terms and conditions of commercial sale* of NXP Semiconductors.

Right to make changes — NXP Semiconductors reserves the right to make changes to information published in this document, including without limitation specifications and product descriptions, at any time and without notice. This document supersedes and replaces all information supplied prior to the publication hereof.

Suitability for use — NXP Semiconductors products are not designed, authorized or warranted to be suitable for use in life support, life-critical or safety-critical systems or equipment, nor in applications where failure or malfunction of an NXP Semiconductors product can reasonably be expected to result in personal injury, death or severe property or environmental damage. NXP Semiconductors and its suppliers accept no liability for inclusion and/or use of NXP Semiconductors products in such equipment or applications and therefore such inclusion and/or use is at the customer's own risk.

Applications — Applications that are described herein for any of these products are for illustrative purposes only. NXP Semiconductors makes no representation or warranty that such applications will be suitable for the specified use without further testing or modification.

Customers are responsible for the design and operation of their applications and products using NXP Semiconductors products, and NXP Semiconductors accepts no liability for any assistance with applications or customer product design. It is customer's sole responsibility to determine whether the NXP Semiconductors product is suitable and fit for the customer's applications and products planned, as well as for the planned application and use of customer's third party customer(s). Customers should provide appropriate design and operating safeguards to minimize the risks associated with their applications and products.

NXP Semiconductors does not accept any liability related to any default, damage, costs or problem which is based on any weakness or default in the customer's applications or products, or the application or use by customer's third party customer(s). Customer is responsible for doing all necessary testing for the customer's applications and products using NXP Semiconductors products in order to avoid a default of the applications and the products or of the application or use by customer's third party customer(s). NXP does not accept any liability in this respect.

Limiting values — Stress above one or more limiting values (as defined in the Absolute Maximum Ratings System of IEC 60134) will cause permanent damage to the device. Limiting values are stress ratings only and (proper) operation of the device at these or any other conditions above those given in the Recommended operating conditions section (if present) or the Characteristics sections of this document is not warranted. Constant or repeated exposure to limiting values will permanently and irreversibly affect the quality and reliability of the device.

Terms and conditions of commercial sale — NXP Semiconductors products are sold subject to the general terms and conditions of commercial sale, as published at http://www.nxp.com/profile/terms, unless otherwise agreed in a valid written individual agreement. In case an individual agreement is concluded only the terms and conditions of the respective agreement shall apply. NXP Semiconductors hereby expressly objects to applying the customer's general terms and conditions with regard to the purchase of NXP Semiconductors products by customer.

No offer to sell or license — Nothing in this document may be interpreted or construed as an offer to sell products that is open for acceptance or the grant, conveyance or implication of any license under any copyrights, patents or other industrial or intellectual property rights.

All information provided in this document is subject to legal disclaimers.

© NXP Semiconductors N.V. 2017. All rights reserved.

Export control — This document as well as the item(s) described herein may be subject to export control regulations. Export might require a prior authorization from competent authorities.

Non-automotive qualified products — Unless this data sheet expressly states that this specific NXP Semiconductors product is automotive qualified, the product is not suitable for automotive use. It is neither qualified nor tested in accordance with automotive testing or application requirements. NXP Semiconductors accepts no liability for inclusion and/or use of non-automotive qualified products in automotive equipment or applications.

In the event that customer uses the product for design-in and use in automotive applications to automotive specifications and standards, customer (a) shall use the product without NXP Semiconductors' warranty of the product for such automotive applications, use and specifications, and (b) whenever customer uses the product for automotive applications beyond NXP Semiconductors' specifications such use shall be solely at customer's own risk, and (c) customer fully indemnifies NXP Semiconductors for any liability, damages or failed product claims resulting from customer design and use of the product for automotive applications beyond NXP Semiconductors' standard warranty and NXP Semiconductors' product specifications.

19.4 Trademarks

Notice: All referenced brands, product names, service names and trademarks are the property of their respective owners.

I²C-bus — logo is a trademark of NXP B.V.

20. Contact information

For more information, please visit: **http://www.nxp.com**

For sales office addresses, please send an email to: **salesaddresses@nxp.com**

All information provided in this document is subject to legal disclaimers.

© NXP Semiconductors N.V. 2017. All rights reserved.

21. Contents

1 General description . . . 1
2 Features and benefits . . . 1
3 Applications . . . 4
4 Ordering information . . . 5
5 Block diagram . . . 7
6 Pinning information . . . 8
6.1 Pinning . . . 8
6.2 Pin description . . . 10
7 Functional description . . . 51
7.1 Architectural overview . . . 51
7.2 ARM Cortex-M4 processor . . . 51
7.3 ARM Cortex-M4 Floating Point Unit (FPU) . . . 51
7.4 On-chip flash program memory . . . 51
7.5 EEPROM . . . 52
7.6 On-chip SRAM . . . 52
7.7 Memory Protection Unit (MPU) . . . 52
7.8 Memory map . . . 52
7.9 Nested Vectored Interrupt Controller (NVIC) . . . 53
7.9.1 Features . . . 53
7.9.2 Interrupt sources . . . 53
7.10 Pin connect block . . . 54
7.11 External Memory Controller (EMC) . . . 54
7.11.1 Features . . . 56
7.12 General purpose DMA controller . . . 56
7.12.1 Features . . . 56
7.13 CRC engine . . . 57
7.13.1 Features . . . 57
7.14 LCD controller . . . 58
7.14.1 Features . . . 58
7.15 Ethernet . . . 58
7.15.1 Features . . . 59
7.16 USB interface . . . 60
7.16.1 USB device controller . . . 60
7.16.1.1 Features . . . 60
7.16.2 USB host controller . . . 60
7.16.2.1 Features . . . 60
7.16.3 USB OTG controller . . . 61
7.16.3.1 Features . . . 61
7.17 SD/MMC card interface . . . 61
7.17.1 Features . . . 61
7.18 Fast general purpose parallel I/O . . . 61
7.18.1 Features . . . 62
7.19 12-bit ADC . . . 62
7.19.1 Features . . . 62
7.20 10-bit DAC . . . 62
7.20.1 Features . . . 62
7.21 Comparator . . . 63
7.21.1 Features . . . 63
7.22 UART0/1/2/3 and USART4 . . . 63
7.22.1 Features . . . 63
7.23 SPIFI . . . 64
7.23.1 Features . . . 64
7.24 SSP serial I/O controller . . . 64
7.24.1 Features . . . 65
7.25 I^2C-bus serial I/O controllers . . . 65
7.25.1 Features . . . 65
7.26 I^2S-bus serial I/O controllers . . . 65
7.26.1 Features . . . 66
7.27 CAN controller and acceptance filters . . . 66
7.27.1 Features . . . 66
7.28 General purpose 32-bit timers/external event counters . . . 67
7.28.1 Features . . . 67
7.29 Pulse Width Modulator (PWM) . . . 67
7.29.1 Features . . . 68
7.30 Motor control PWM . . . 68
7.31 Quadrature Encoder Interface (QEI) . . . 69
7.31.1 Features . . . 69
7.32 ARM Cortex-M4 system tick timer . . . 69
7.33 Windowed WatchDog Timer (WWDT) . . . 69
7.33.1 Features . . . 70
7.34 RTC and backup registers . . . 70
7.34.1 Features . . . 70
7.35 Event monitor/recorder . . . 71
7.35.1 Features . . . 71
7.36 Clocking and power control . . . 71
7.36.1 Crystal oscillators . . . 71
7.36.1.1 Internal RC oscillator . . . 72
7.36.1.2 Main oscillator . . . 72
7.36.1.3 RTC oscillator . . . 73
7.36.1.4 Watchdog oscillator . . . 73
7.36.2 Main PLL (PLL0) and Alternate PLL (PLL1) . . . 73
7.36.3 Wake-up timer . . . 74
7.36.4 Power control . . . 74
7.36.4.1 Sleep mode . . . 74
7.36.4.2 Deep-sleep mode . . . 75
7.36.4.3 Power-down mode . . . 75
7.36.4.4 Deep power-down mode . . . 76
7.36.4.5 Wake-up Interrupt Controller (WIC) . . . 76
7.36.5 Peripheral power control . . . 76
7.36.6 Power domains . . . 76
7.37 System control . . . 78
7.37.1 Reset . . . 78
7.37.2 Brownout detection . . . 78
7.37.3 Code security (Code Read Protection - CRP) 78

continued >>

All information provided in this document is subject to legal disclaimers.

© NXP Semiconductors N.V. 2017. All rights reserved.

7.37.4 APB interface 79
7.37.5 AHB multilayer matrix 79
7.37.6 External interrupt inputs 79
7.37.7 Memory mapping control 79
7.38 Debug control 79
8 Limiting values. 79
9 Thermal characteristics 80
10 Static characteristics. 82
10.1 Power consumption 85
10.2 Peripheral power consumption 86
10.3 Electrical pin characteristics 88
11 Dynamic characteristics 90
11.1 Flash memory 90
11.2 External memory interface 90
11.3 External clock 98
11.4 Internal oscillators. 98
11.5 I/O pins 98
11.6 SSP interface 99
11.7 I^2C-bus 101
11.8 I^2S-bus interface 102
11.9 LCD 103
11.10 SD/MMC 104
11.11 SPIFI. 105
12 Characteristics of the analog peripherals . . 105
12.1 ADC electrical characteristics. 105
12.2 DAC electrical characteristics 108
12.3 Comparator electrical characteristics 108
13 Application information. 110
13.1 Suggested USB interface solutions 110
13.2 Crystal oscillator XTAL input and component selection 115
13.3 XTAL Printed-Circuit Board (PCB) layout guidelines 117
13.4 Standard I/O pin configuration 117
13.5 Reset pin configuration. 118
13.6 Reset pin configuration for RTC operation . . 118
14 Package outline 120
15 Soldering 127
16 Abbreviations. 132
17 References 133
18 Revision history. 134
19 Legal information. 137
19.1 Data sheet status 137
19.2 Definitions. 137
19.3 Disclaimers 137
19.4 Trademarks. 138
20 Contact information. 138
21 Contents 139

Please be aware that important notices concerning this document and the product(s) described herein, have been included in section 'Legal information'.

© NXP Semiconductors N.V. 2017. All rights reserved.

For more information, please visit: http://www.nxp.com
For sales office addresses, please send an email to: salesaddresses@nxp.com

Date of release: 11 January 2017
Document identifier: LPC408X_7X